Cubby Desk

This classically designed desk is as attractive and loaded with storage. Clean lines, sophisticated style and versatile finishing options... not to mention easy to build. What more does your home office need? Build it today and share your version with us on our website.

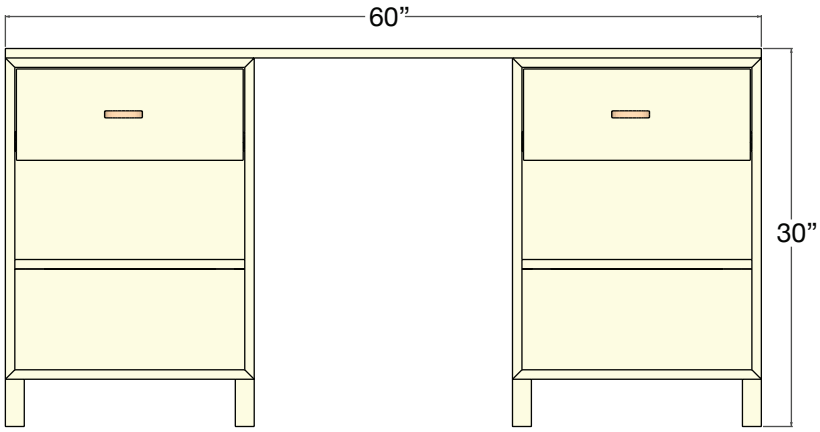

FRONT

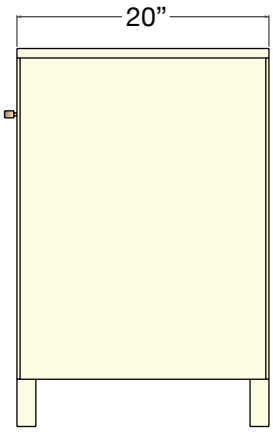

SIDE

Make sure you read through the instructions carefully and take notice of any special construction notes prior to making any cuts.

Many pieces require you to cut them to fit a certain size while you are building. Its best not to cut pieces until you need them. Take your time and study all the diagrams.

And always practice safe DIY'ing. Have fun!

CUT LIST

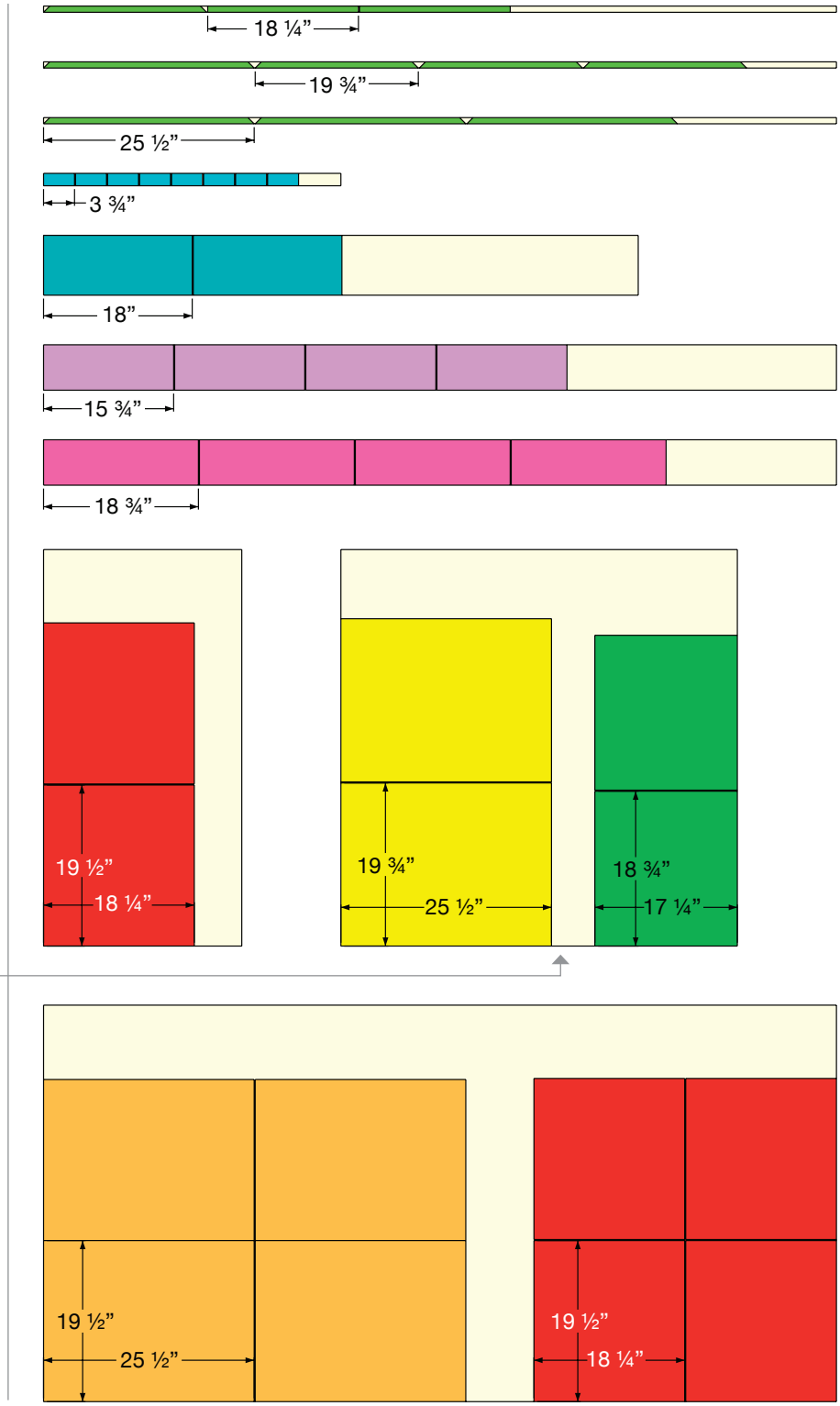

NOTE
Its worth saying again... These 1x6 and 1x8 boards are for the drawers. ALWAYS cut your boards to fit the opening. NEVER cut these ahead of time.

NOTE
We don't show the edge glued panel here since we won't be cutting it and using it whole. Don't forget to pick it up at the store.

MATERIALS LIST

Material	Qty
¾" x 4' x 8' plywood	1
¾" x 2' x 4' plywood	1
¼" x 4' x 4' plywood	1
1" x 6" x 8' pine board	2
1" x 8" x 6' pine board	1
2" x 2" x 36" hobby board	1
¼" x ¾" x 8' pine screen molding	3
¾" x 20" x 60" edge glued panel	1

Material	Qty
1-¼" pocket screws	
1-¼" spax screws	
¾" brad nails	
1-¼" brad nails (optional)	
wood glue	
drawer pulls	2
18" drawer glides; such as Home Depot Liberty European bottom mount drawer glides #412136	2

NOTES

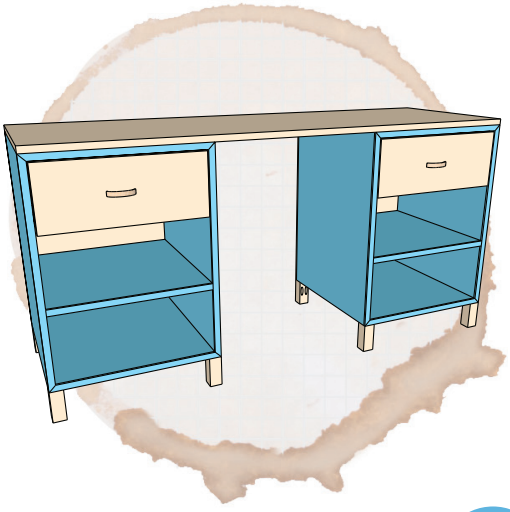

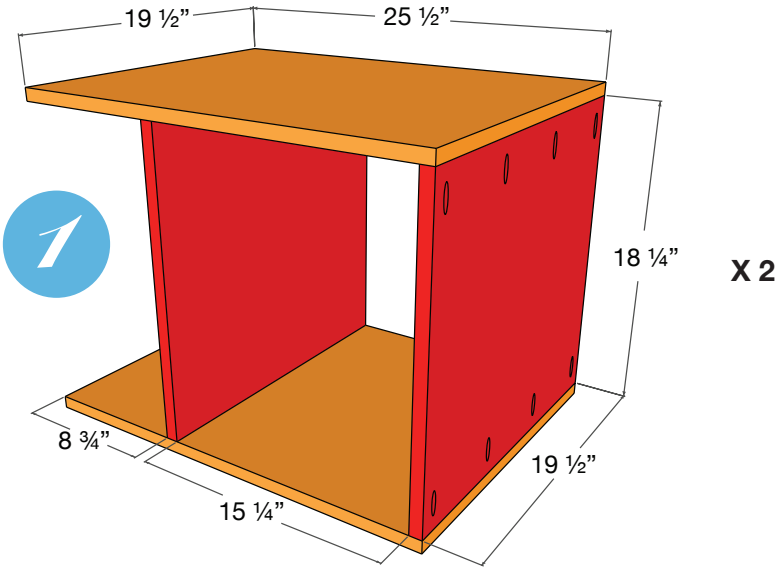

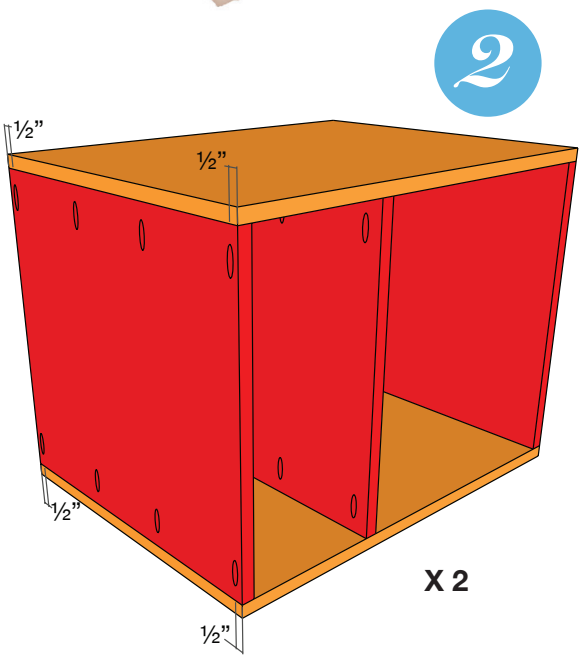

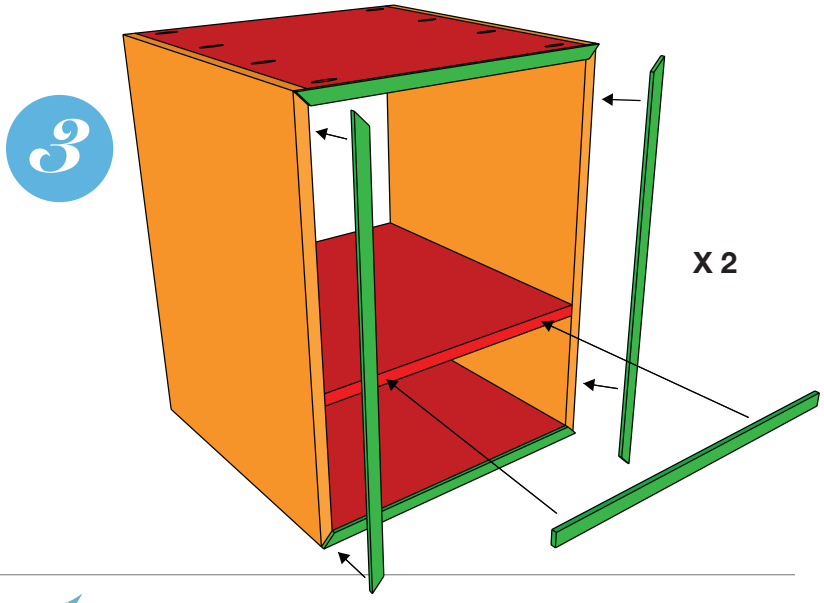

1.

Verify the width of your edge glued panel for the top is a true 20". Make accommodations to the depth of the plywood sides if not.

We will begin by building the two boxes that make up the legs of the Cubby Desk.
Drill ¾" pocket holes into the top and middle shelf in the same locations for each as shown. Making sure the pocket holes are oriented correctly and spacing the boards as illustrated, attach with wood glue and 1-½" pocket screws making sure the outside edges are flush. Repeat for the second box.

2.

Now for the bottom. Drill ¾" pocket holes, making sure the center of the pocket holes on the outside edges are ½" in from the edge. This is necessary to be able to attach the feet later on. Attach with wood glue and 1-½" pocket screws making sure the edges are flush. Repeat for the second box.

3.

Now lets trim out the front to cover up the plywood edges. Using the screen molding as the face frame instead of the usual 1x2 boards allows the boxes to feel very light aesthetically and mitering the corners gives the overall design a sense sophistication.

Begin by cutting a 45° miter on one end of the molding. Hold it in place and mark where the longer point of the opposite miter will be. Cut that 45° miter and attach with wood glue and ¾" brad nails. Continue around the front edges of the box. Next, hold a piece in place for the middle shelf. Mark and cut to length. Attach with wood glue and ¾" brad nails.
Repeat for the second box.

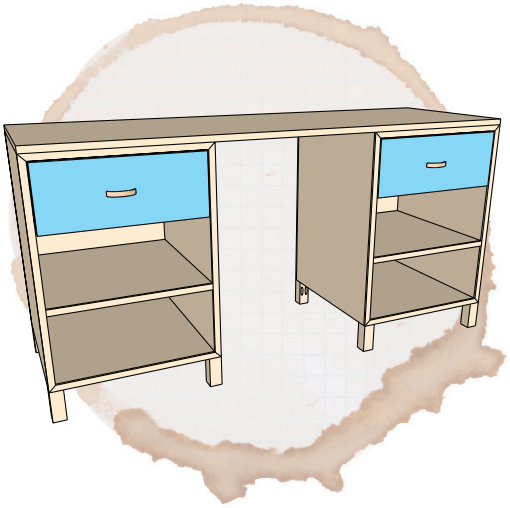

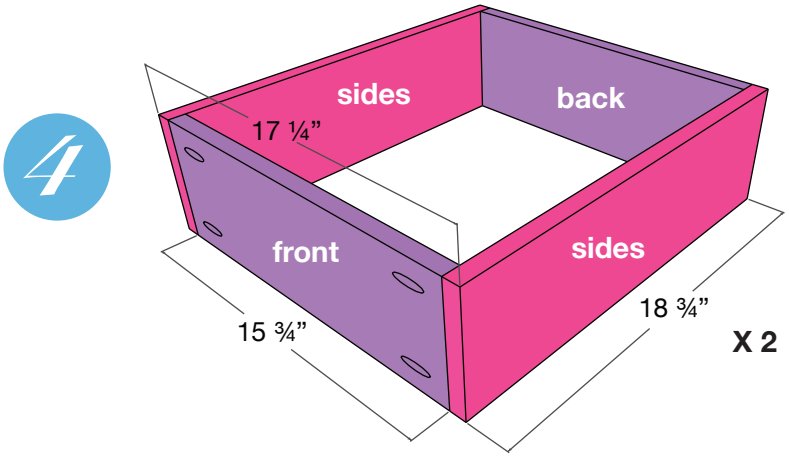

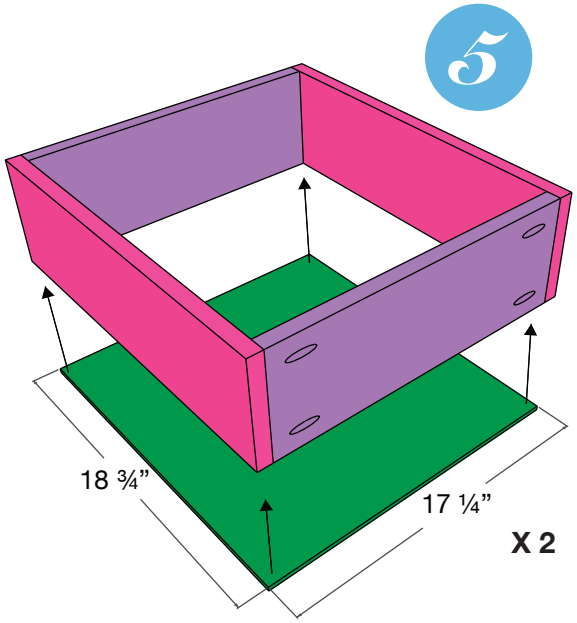

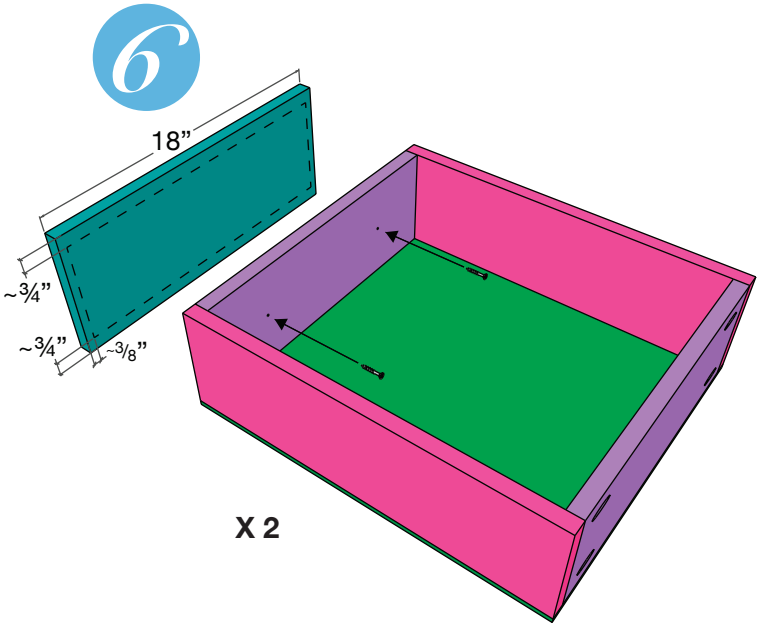

4.

Let's build some drawers. You've heard us say it a million times but here we go once again, build the drawers to fit your opening!

Using drawer glides usually means you cut the wood to make the main box 1/2" narrow on both sides, always follow the directions that come with your drawer glides. Our opening is 18 ¼" wide. Therefor our drawer boxes will be built to be a total of 17 ¼" wide. Taking into account the thickness of the sides being ¾" we are going to cut the front and back boards 15 ¾" long. Drill ¾" pocket holes and attach with wood glue and 1-½" pocket screws as illustrated above making sure the outside edges are flush. Don't worry about the pocket screw holes on the front as the drawer front will cover that up.
Repeat for the other drawer.

5.

Cut the bottom to fit out of ¼" plywood. Attach with wood glue and ¾" brad nails.
Repeat for the other drawer.

6.

Cut the drawer fronts so that they are ⅛" narrower than the opening on either side. This should allow for ample room for the wood of the drawer front to swell naturally through out the seasons. If you are really accurate at your cutting you could go as little as 1/16 narrower because the drawer glides will keep the drawer straighter as opposed to building your desk so that these drawers ride on wood slats.

Since our drawer opening is 18 ¼" wide we will cut the drawer front 18" long. To attach drill a pilot hole on the inside of the front of the drawer box for your screws. Mark your drawer front so that it aligns with the drawer box with roughly the measurements given above. Glue and clamp in place. Then drive two 1 ¼" spax screws from the inside being careful not to drive the screw through the face of the drawer front.

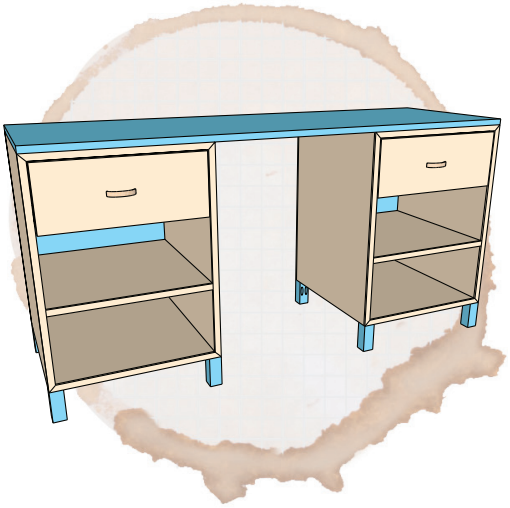

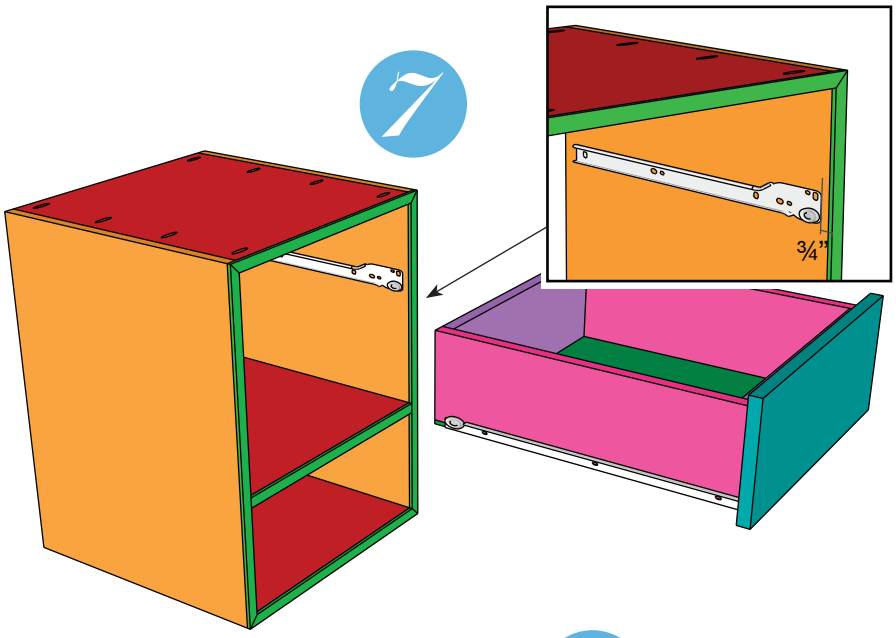

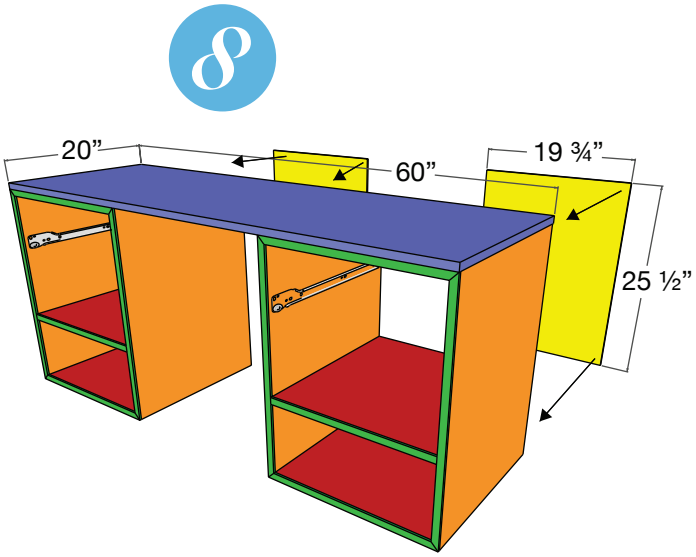

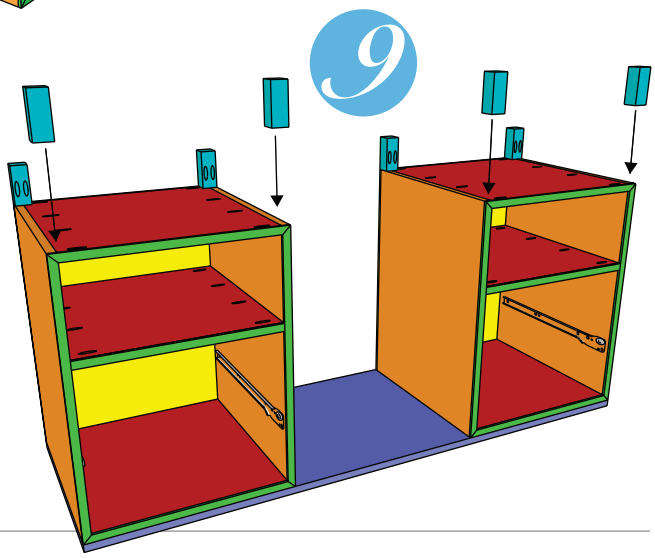

7.

Time for the drawer glides. Don't freak out, just take your time and it will go just fine. These drawer glides come with great instructions. There is only one small adjustment to be made. The instructions show how to install a drawer with an overlay drawer front. Our drawers are inset, meaning that we want the drawer fronts to sit flush with the front edge of the desk and inside the desk boxes. We want the front edge of the drawer glide that attaches to the desk to be set back the thickness of the drawer front, or ¾".
Other than that follow the instructions for the rest of the install. You may need another pair of hands though.
Repeat for the other drawer

8.

Now for the top and backs. Remove the drawers from the boxes.
Drill pilot holes into the top of the boxes, four per box should be adequate. You'll attach the boxes to the top upside down. Lay the panel, top side down, onto a surface that is free from any debris that may scratch the top. Set the two side boxes, top down, onto the panel so that the outside edges and front edges are flush, the back of the panel should overhang the box by ¼" for the backs you will attach in a moment. You may even want to clamp the boxes in place Drilling from the inside attach the boxes to the top.

Cut the ¼" plywood backs to size so that they are flush with the sides, bottom and top edge of the boxes yet fit under the back edge of the top panel. Attach with wood glue and ¾".

9.

To attach the feet drill two ¾" pocket holes on only one side of each foot as shown. This is where the placement of the pocket holes had to be so specific in step 2. The screws for the feet should just miss those screws in step 2. Clamp the feet in place so that the pocket holes face inward and the feet are flush with the outside edges of the boxes and attach with wood glue and 1" pocket screws.

Now flip the desk over, sand and finish to your liking. Finally, attach the drawer pulls.