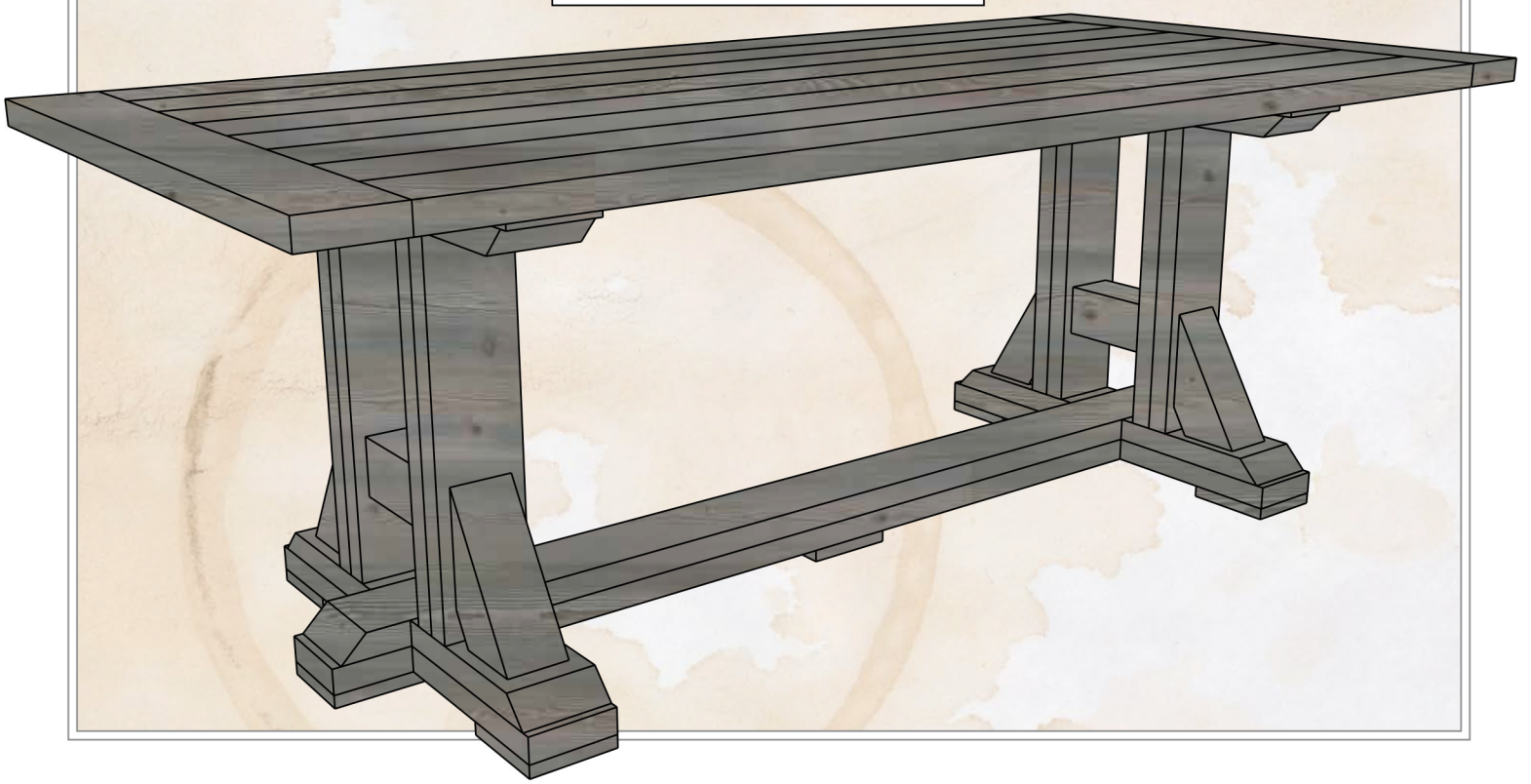

$100 Farmhouse Table

The dining table is the key piece of furniture that brings a family together for life's most memorable occasions or simply a Sunday meal. Help anchor those memories with this beautiful dining table that can easily sit six but can accommodate ten. You can easily complete this project in a couple weekends and learn some skills that will help you in all your DIY projects to come.

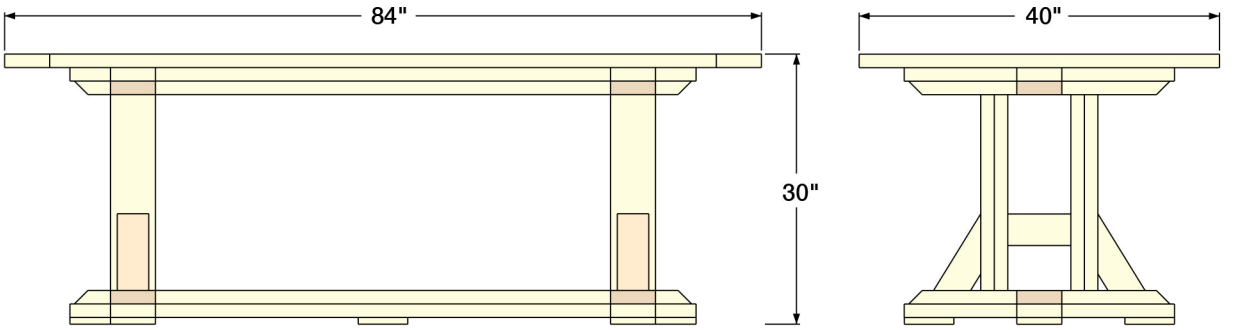

Make sure you read through the instructions carefully and take notice of any special construction notes prior to making any cuts. And always practice safe DIY'ing. Have fun!

PLEASE NOTE - many pieces may require you to cut them to fit a certain size while you are building it. Its best not to cut pieces until you need them. Take your time and study all the diagrams.

CUT LIST

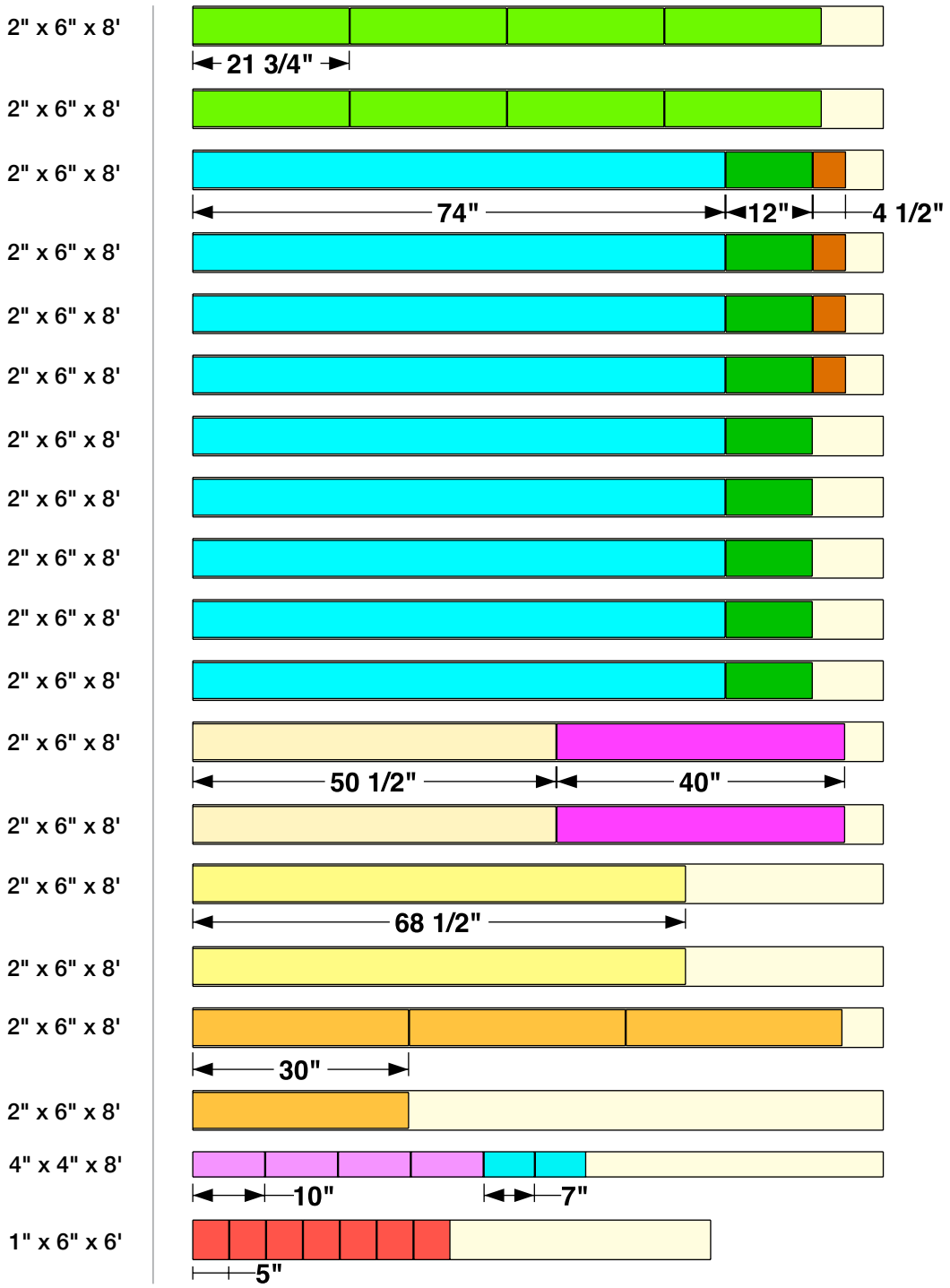

MATERIALS LIST

Material	Qty
2” X 6" X 8’ wall stud	17
4” x 4" x 8’ pine board	1
1” x 6” x 6’ pine board	1

Material	Qty
2-½” pocket screws	
2-½” brad nails	
1-¼” brad nails	
4” SPAX wood screws	
wood glue	

NOTES

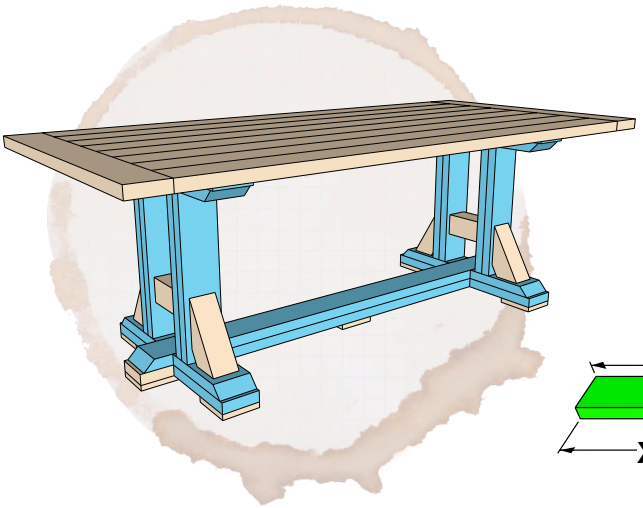

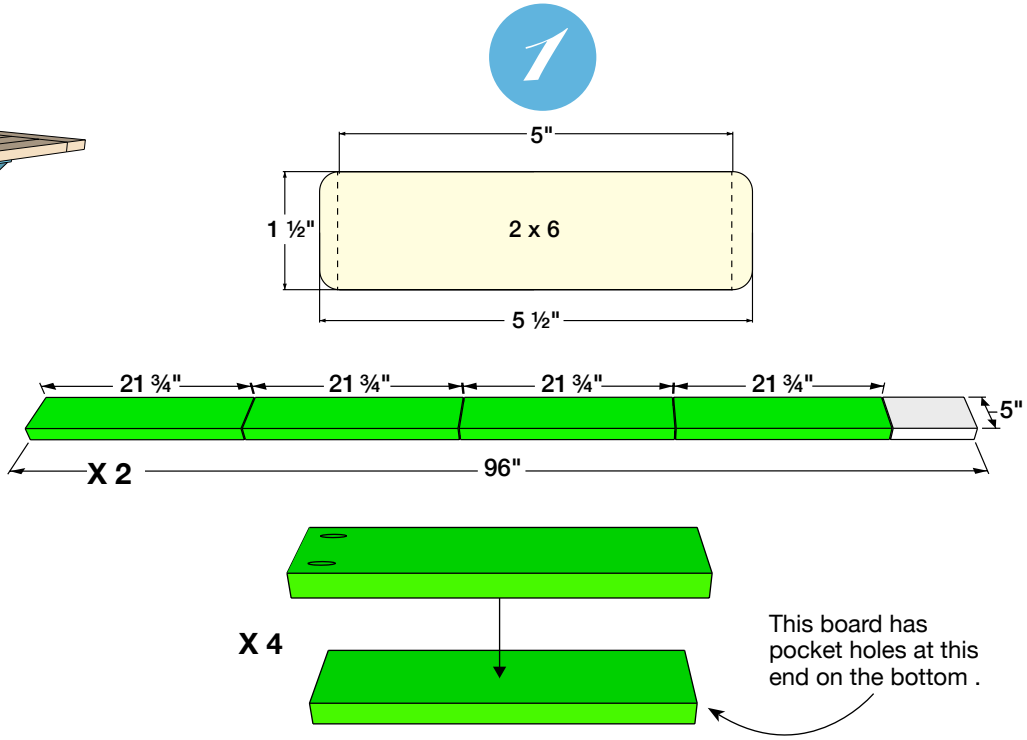

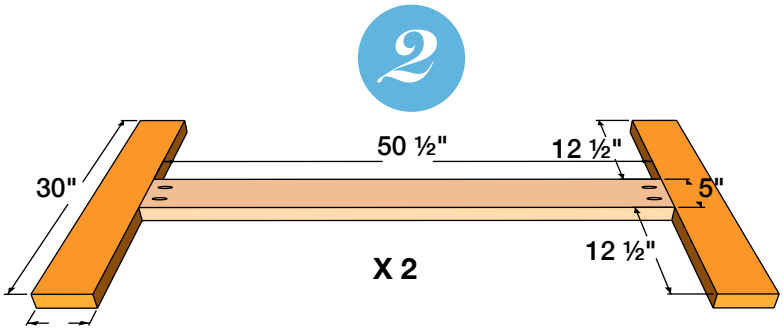

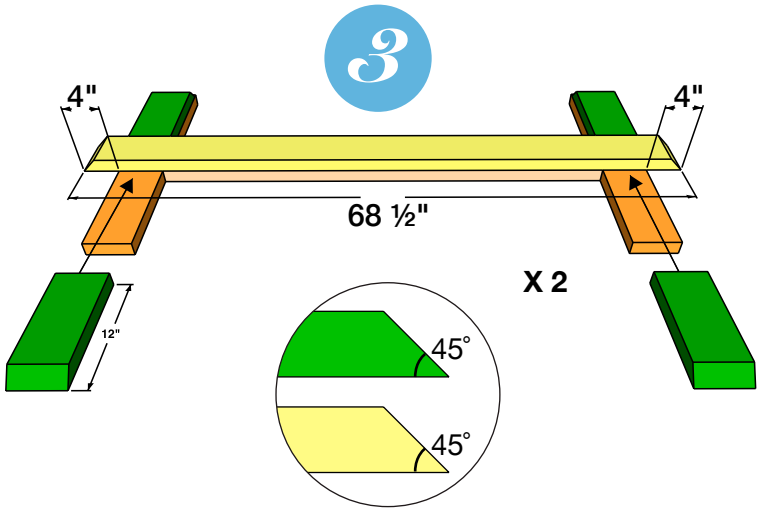

1.

For a slightly more sophisticated look we will be ripping the rounded edges off the 2x6 lumber. For consistency sake rip all boards at the same time so you know all the boards are exactly 5" wide.

First rip enough off one side of all the 2x6 boards to remove just the rounded edges. Then, set your table saw fence at 5" and rip the other rounded side off all the 2x6 boards.

Now we will make the four legs. Take two of the flattened 2x6 boards and cut them into eight 21 ¾" pieces. Drill 1-½" pocket holes at one end of each of the eight segments as shown. Now you will laminate two segments together to make each of the four legs. Pay special attention to the pocket holes; laminate them so that the pocket holes are facing out and at opposite ends as shown. Use plenty of glue, clamp so that the outside edges are flush and attach them together with 2-½" brad nails. Repeat for the remaining three legs.

Save the legs for Step 6.

2.

Now we will form the upper and lower base assemblies. For Steps 2-4 you will complete two identical assemblies.

Cut the 2x6 boards to length according to the illustration above. Drill 1-½" pocket holes and attach with wood glue and 2-½" pocket screws as shown. Repeat with the second assembly.

3.

Cut two **yellow** 2x6 boards to 68 ½" long and cut a 45° miter at both ends of both boards as shown.

Cut eight **green** 2x6 boards to 12" long and cut a 45° miter at one end of all the boards as shown.

Attach the cut boards to the previous two assemblies as shown with wood glue and 2-½" brad nails making sure all outside edges are as flush as possible. The **green** boards will be approximatively ½" shy of the **orange** boards of the previous assembly. The **yellow** boards will extend past the **orange** boards approximately 4". Repeat with the second assembly.

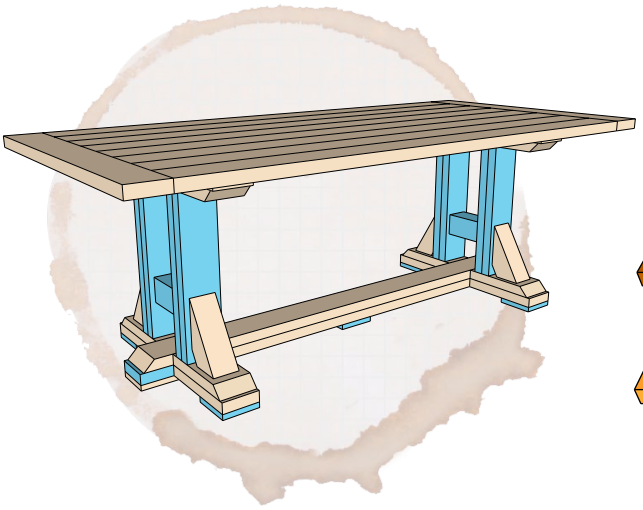

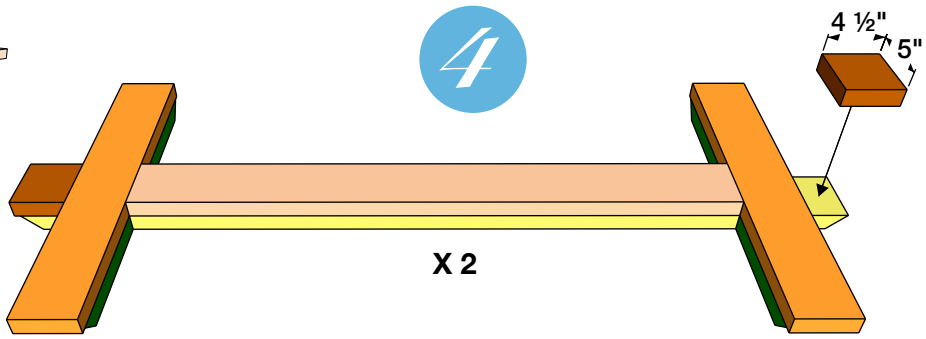

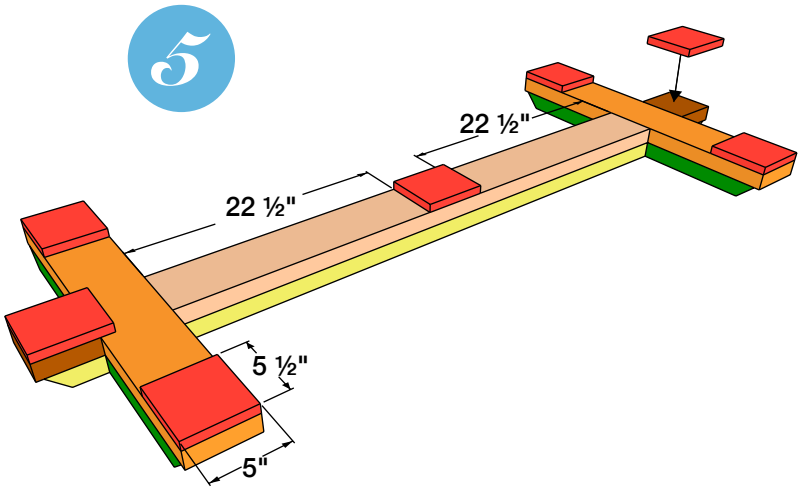

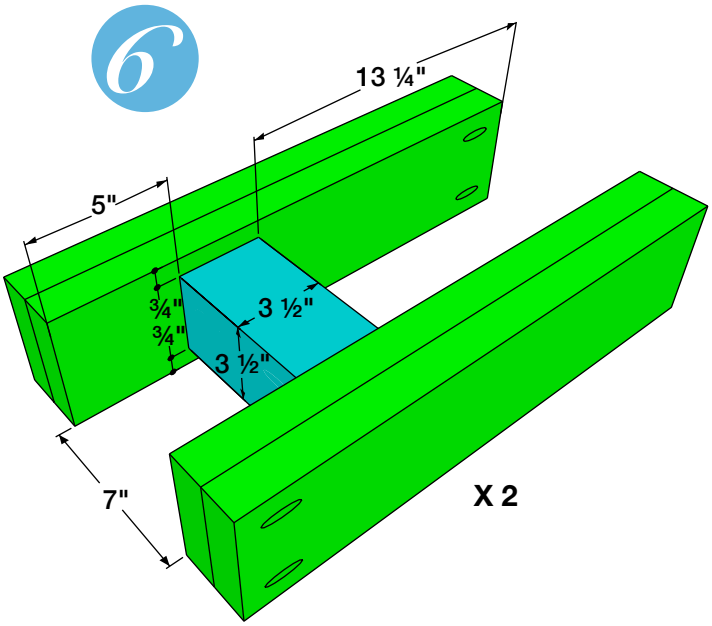

4.

Flip both the upper and the lower assemblies over and attach 4 ½" blocks onto the underside of the **yellow** extensions at both ends with wood glue and 2-½" brad nails.

5.

For this step you will only be using one of the assemblies and this will become the lower assembly.

Cut seven 5" long pieces of 1x6. Attach as shown with wood glue and 1-¼" brad nails making sure all outside edges are flush.

6.

Now we will assemble the two vertical leg assemblies.

Cut two 4x4 boards to 7" long. Using two of the leg laminations from Step 1 clamp the leg assembly as shown. Make sure the pocket holes of the **green** leg laminations are positioned as shown. The Pocket holes will be on the outside of each at the ends closest to the 4x4 and on the inside of each at the ends farthest away. Drive 4" Spax screws through the outside of the **green** laminated boards into the inner 4x4 board.

Repeat with the second assembly.

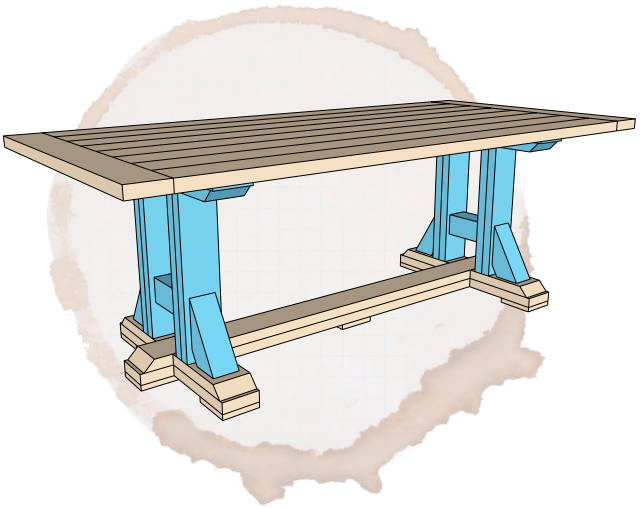

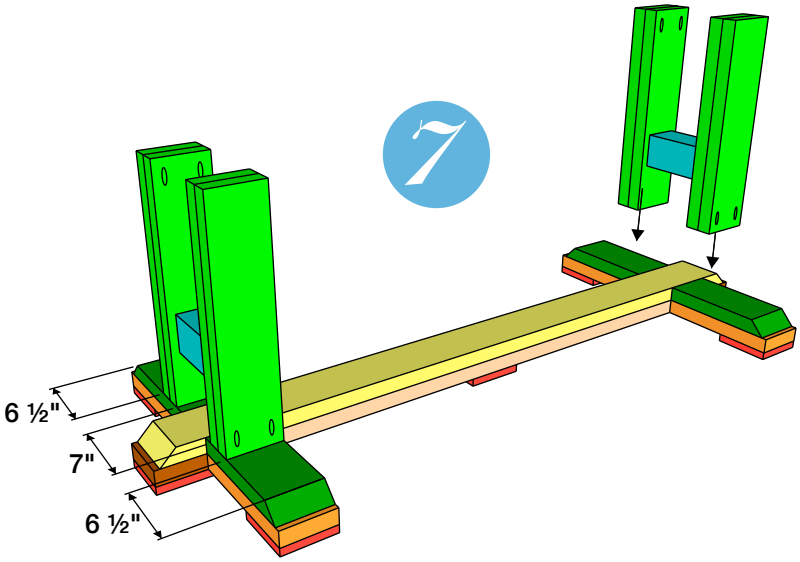

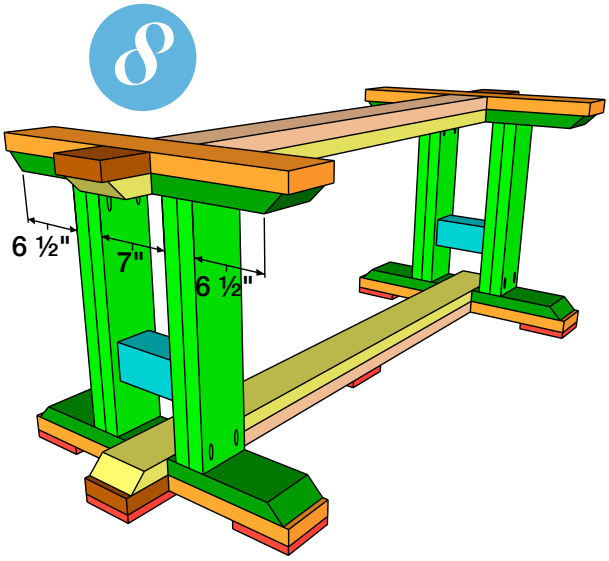

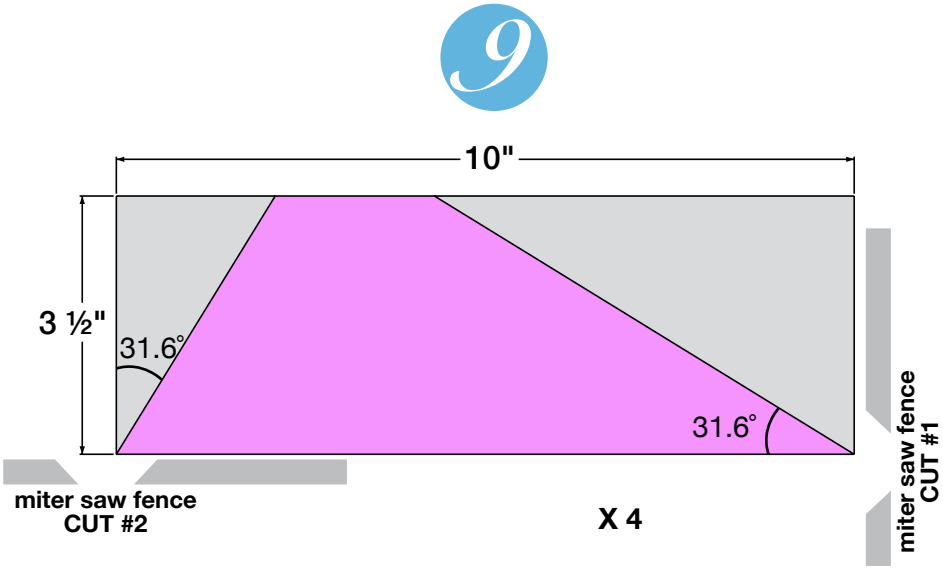

7.

Now attach the two vertical leg assemblies to the lower base assembly with wood glue and 2-½" pocket screws with the 4x4 cross brace closer to the base assembly. Pay close attention to the spacing shown in the illustration above. Make sure you check that the leg assemblies are perpendicular to the lower base assembly prior to attaching with screws.

8.

Next attach the upper assembly as shown with wood glue and 2-½" pocket screws. Make sure you check that the leg assemblies are perpendicular to the upper base assembly prior to attaching with screws.

9.

Next we will cut the angle braces for the lower assembly. Be very careful with this step as it requires you to hold the 4x4 at an awkward angle to the miter saw fence. Double check that the blade with not hit the miter saw fence before cutting.

Begin by cutting four 4x4 boards to 10" long.

Set your miter saw at 31.6° which should be a stop on most miter saws. Place your 4x4 board with end up against the miter saw fence (CUT #1, above right) so that the board sits perpendicular to the miter saw fence. Grip the 4x4 board by placing pressure downward and slowly cut through the board. Release the miter saw trigger and wait to remove the board until the blade has fully stopped.

With your miter saw still at 31.6°, set your 4x4 board with the long edge against the miter saw fence (CUT #2, above left) to cut the other angle. Repeat with the three other wedges.

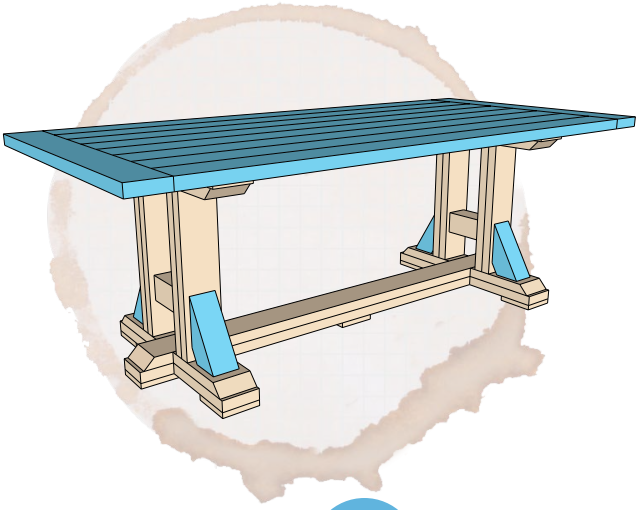

10

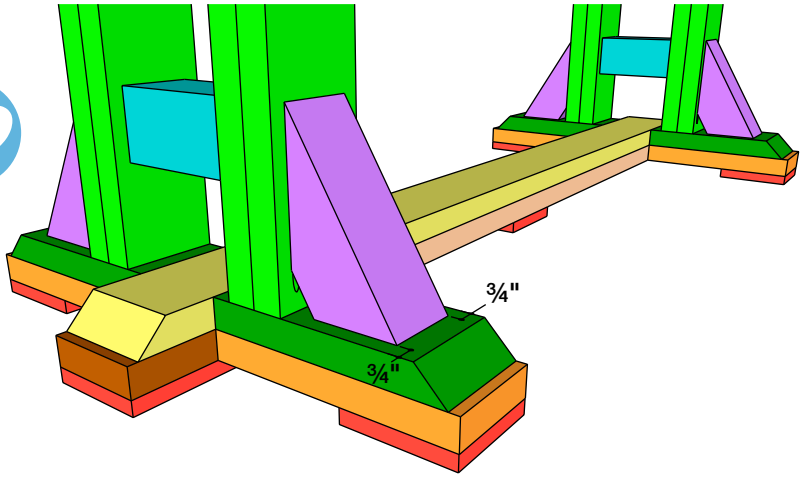

11

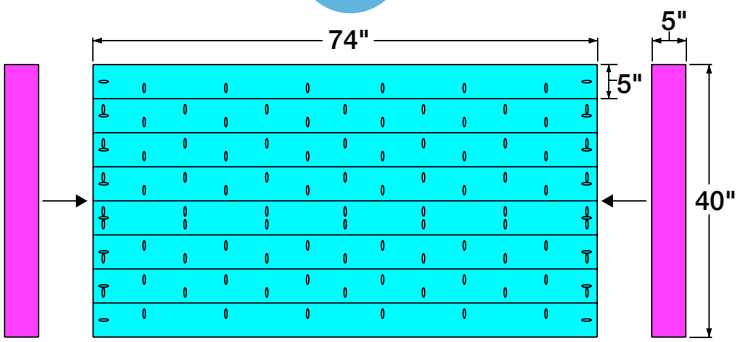

12

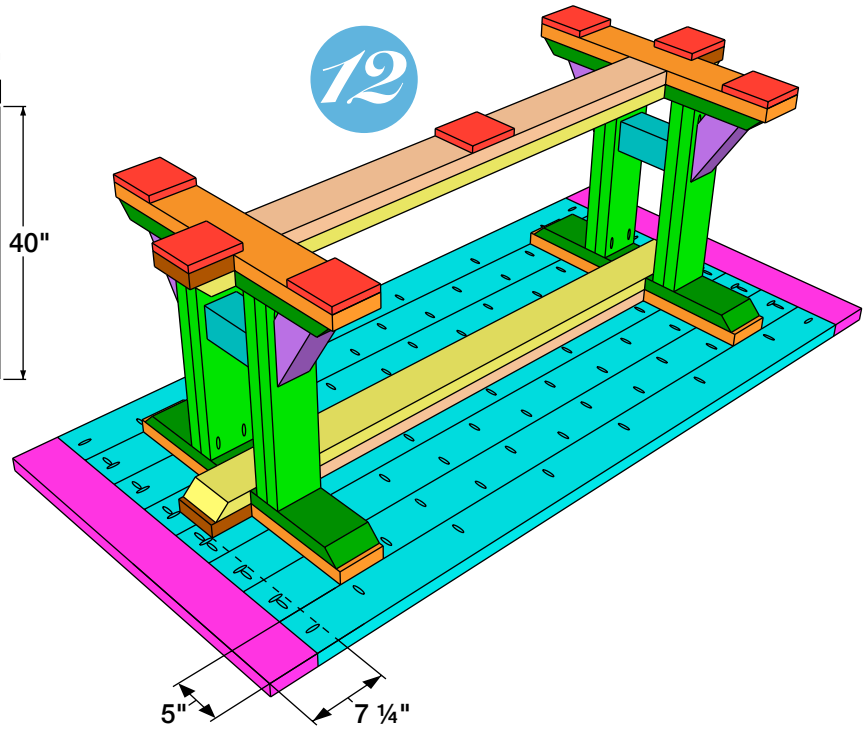

10.

Place your 4x4 wedges as shown, centered on the 2x6 feet. Attach with wood glue and 2-½" brad nails. Repeat with the other three wedges.

11.

Assemble your top. Begin by drilling 1-½" pocket holes into the edges of the 74" boards and the ends (not shown yet) as shown. Attach the 74" boards edge to edge with wood glue and 2-½" pocket screws.

Then cut your end bread boards to fit flush with the outside edges of the 74" board assembly, they should be about 40" long. Attach with wood glue and 2-½" pocket screws.

12.

Finally lay your top down on a flat surface with the pocket holes facing up. Have someone help you flip the entire leg assembly upside down onto the top. Center it with the measurements from the illustration above and attach with 4" SPAX screws.