©2017 WWW.SHANTY-2-CHIC.COM

MODERN FARMHOUSE PLATFORM BED

SUPPLY LIST

Item	Quantity	Description
2x6x8	2	ripped edges to 4" wide!
2x2x8	3	framing lumber
1x8x8	2	pine or whitewood
1x4x8	4	pine or whitewood
1x6x6	5	pine or whitewood
Spax Screws	Handful	2"
Kreg Pocket Hole Screws	Handful	1.25"
wood glue		

Remember! Many of these cuts are best made as you go. If you have questions, check out the tutorial on our site!

CUT LIST

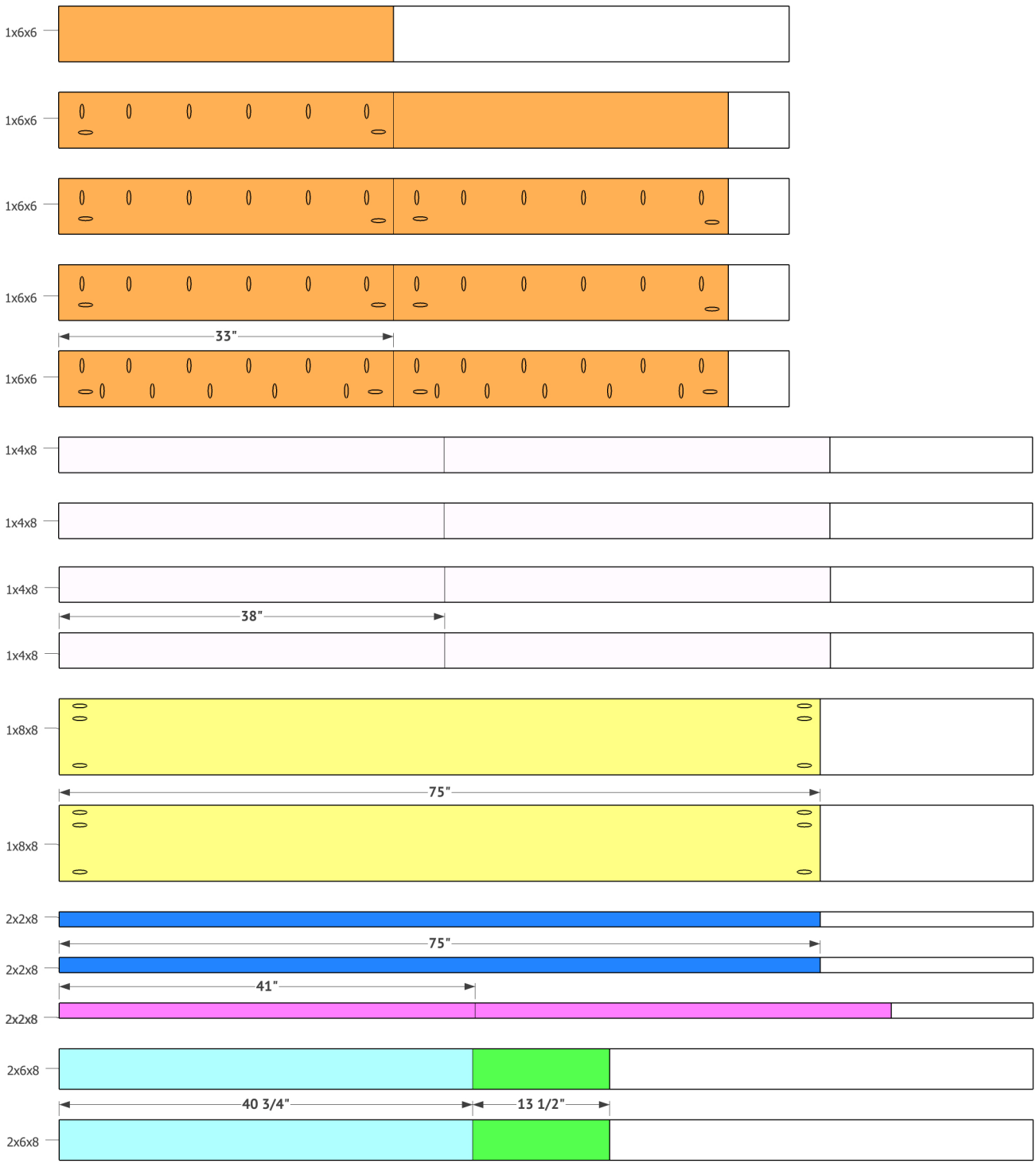

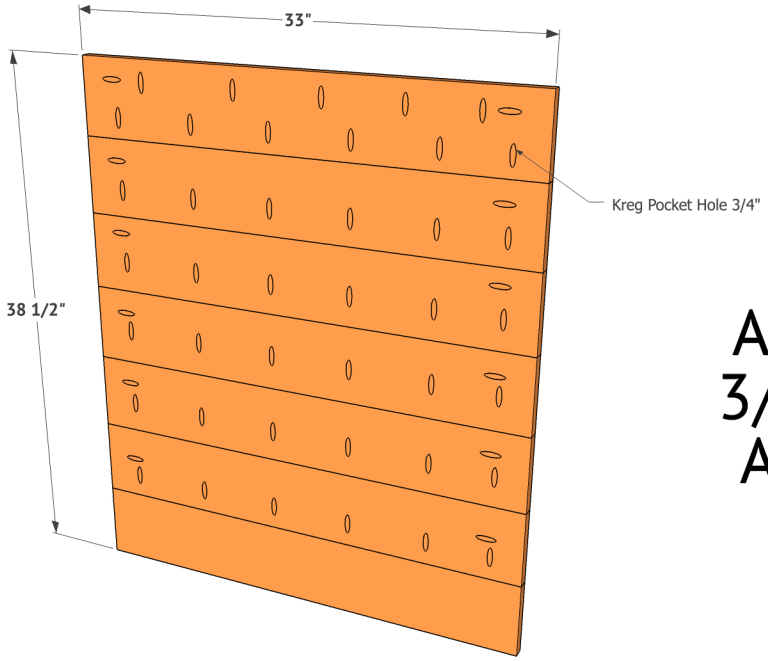

1

After making your cuts, add 3/4” pocket holes on boards. Attach the planks together using 1.25” pocket hole screws.

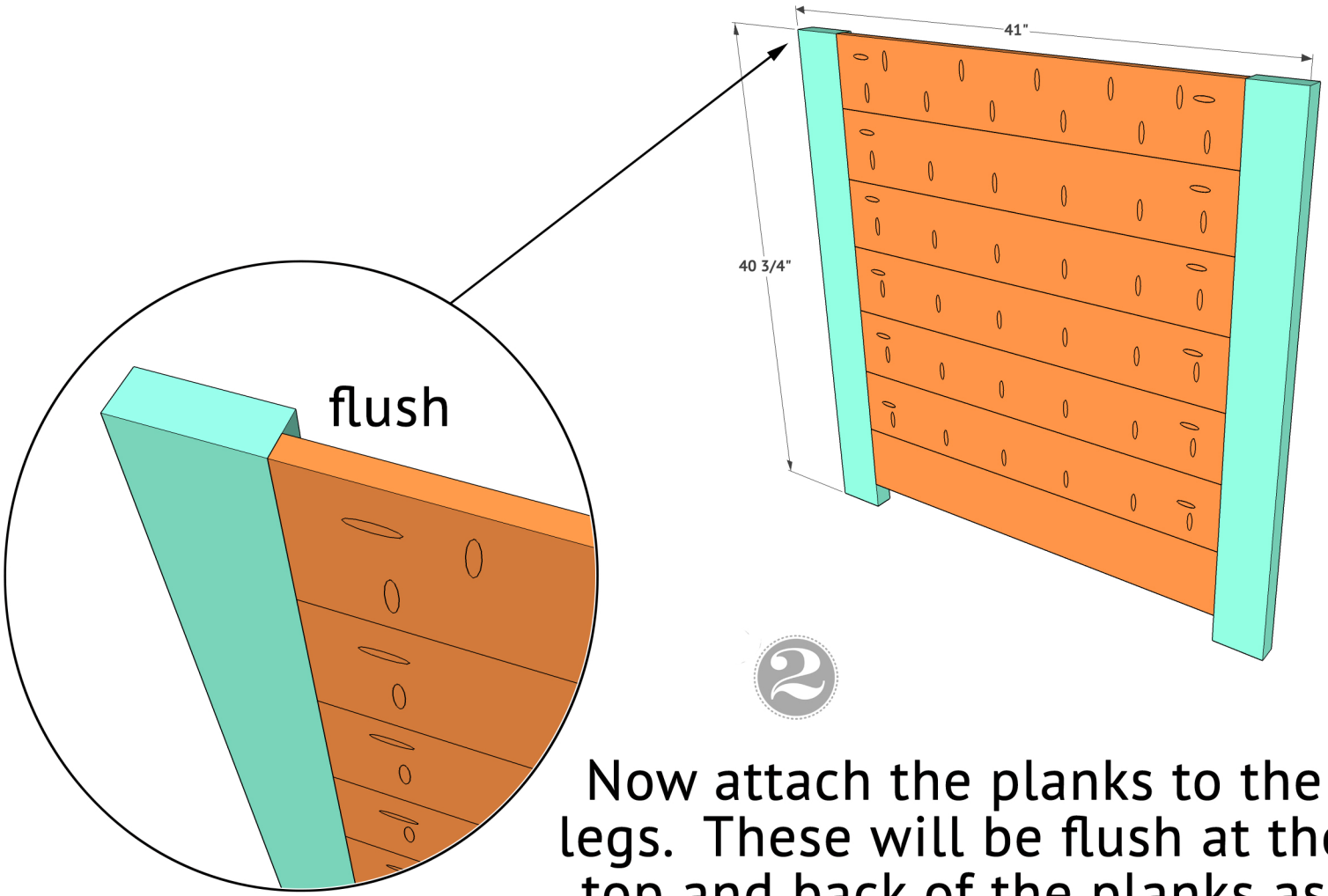

2

Now attach the planks to the legs. These will be flush at the top and back of the planks as shown. Attach using 1.25” pocket hole screws.

3

Now attach the 2x2 board along the top of the headboard using 1.25” pocket hole screws. Headboard done!

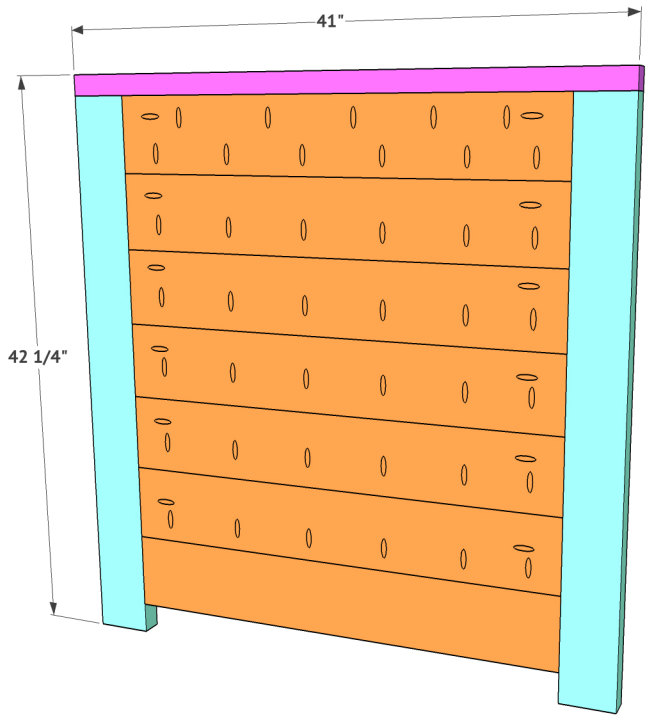

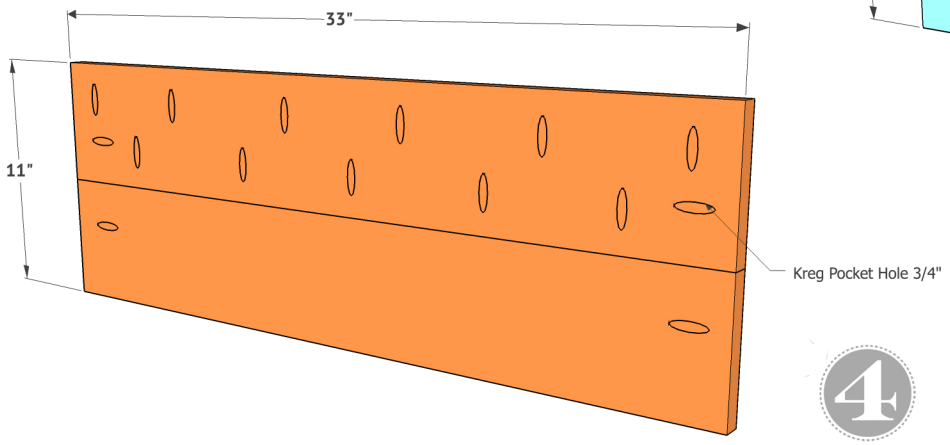

4

Plank the two boards to form the footboard the same way you did on the headboard. Attach them using 1.25” pocket hole screws.

5

Now attach the planks to the leg pieces. These will also be flush on the top and back like the headboard was.

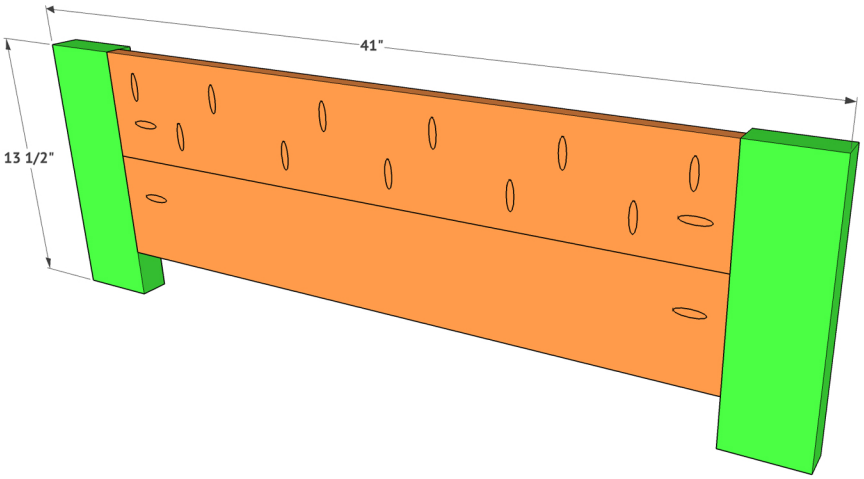

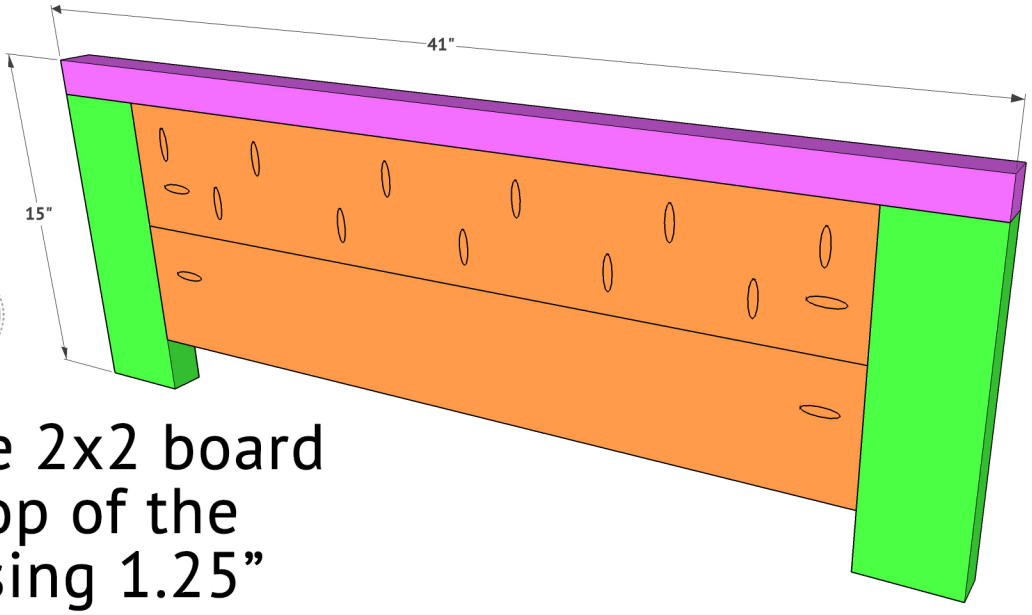

6

Now attach the 2x2 board along the top of the footboard using 1.25” pocket hole screws. footboard done!

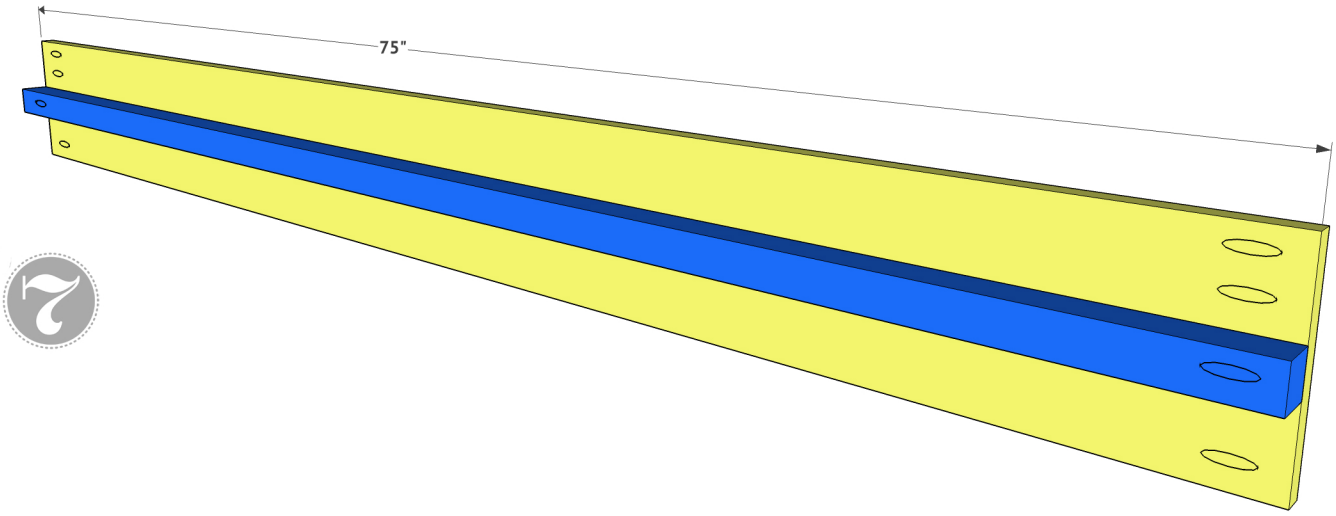

7

Create the bed rails by first adding pocket holes to each board. Then, attach the 2x2 cleat to the 1x8 runner using wood glue and 2” Spax or wood screws. You will build 2 of these.

8

Line the rails up as shown and attach to the headboard and footboard using 1.25” pocket hole screws.

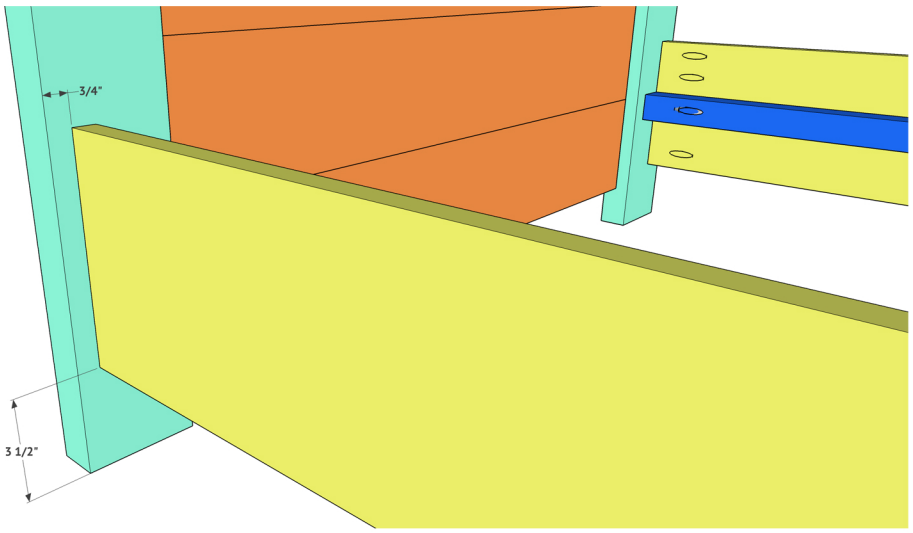

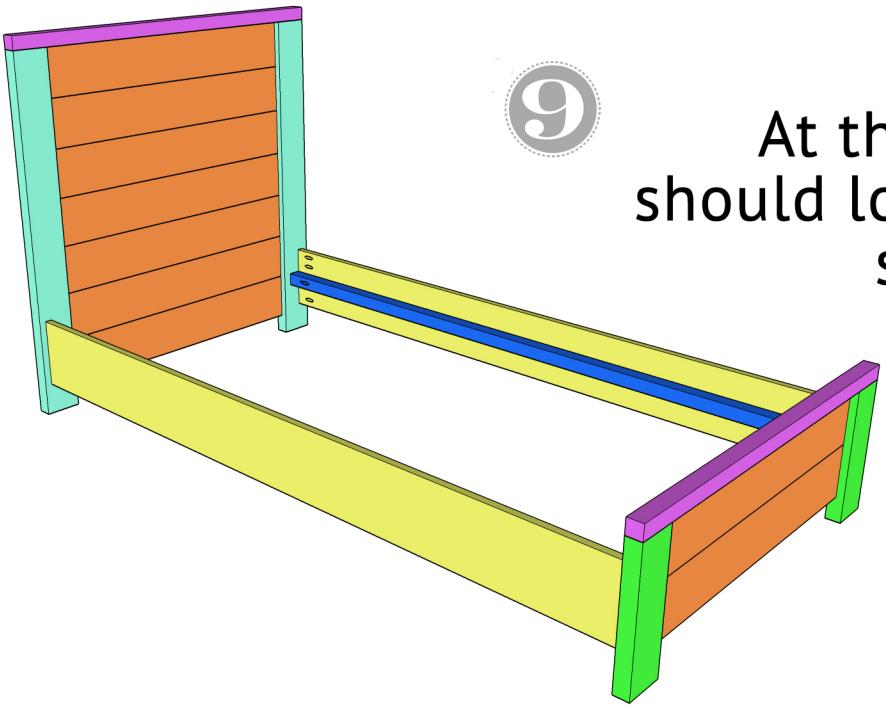

9

At this point, your bed should look like this. The final step is adding the slats to support the mattress.

10
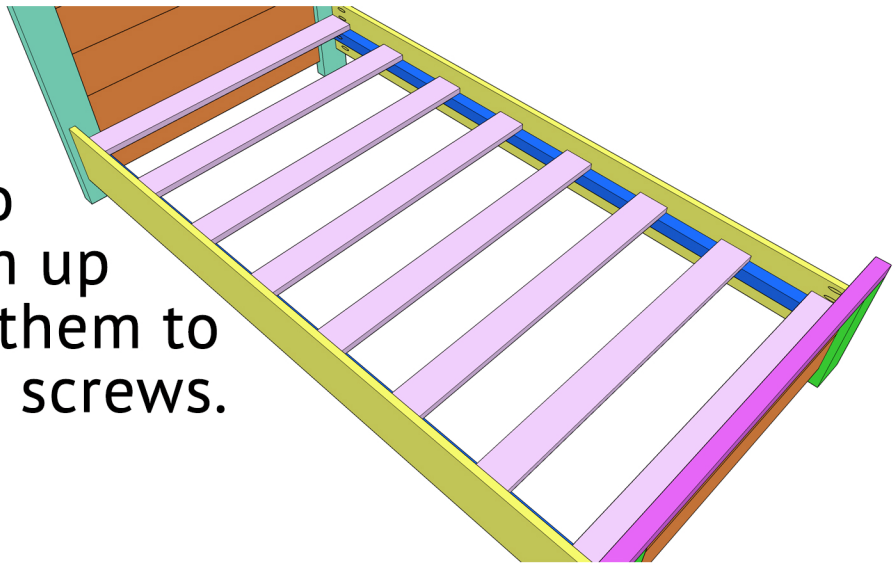
Cut the slats to size, and line them up on the cleats. Attach them to the cleats using wood screws.