©2017 WWW.SHANTY-2-CHIC.COM

FARMHOUSE ISLAND

SUPPLY LIST

Item	Quantity	Description
2x10x8	1	Framing Lumber
2x6x8	12	Framing Lumber
2x4x8	3	Framing Lumber
1/4"x1 1/8"x96" Lattice	2	
1/4"x1 1/8"x108" Lattice	1	
48"x96"x1/2" Plywood	1	Hardwood Plywood (Birch)
6"x34" Turned Legs	6	Link in Post
2 1/2"" Pocket Hole screws		
1 1/4" Brad Nails		
5/8" Pin Nails		
Wood Glue		

Remember! Many of these cuts are best made as you go. If you have questions, check out the tutorial on our site!

CUT LIST

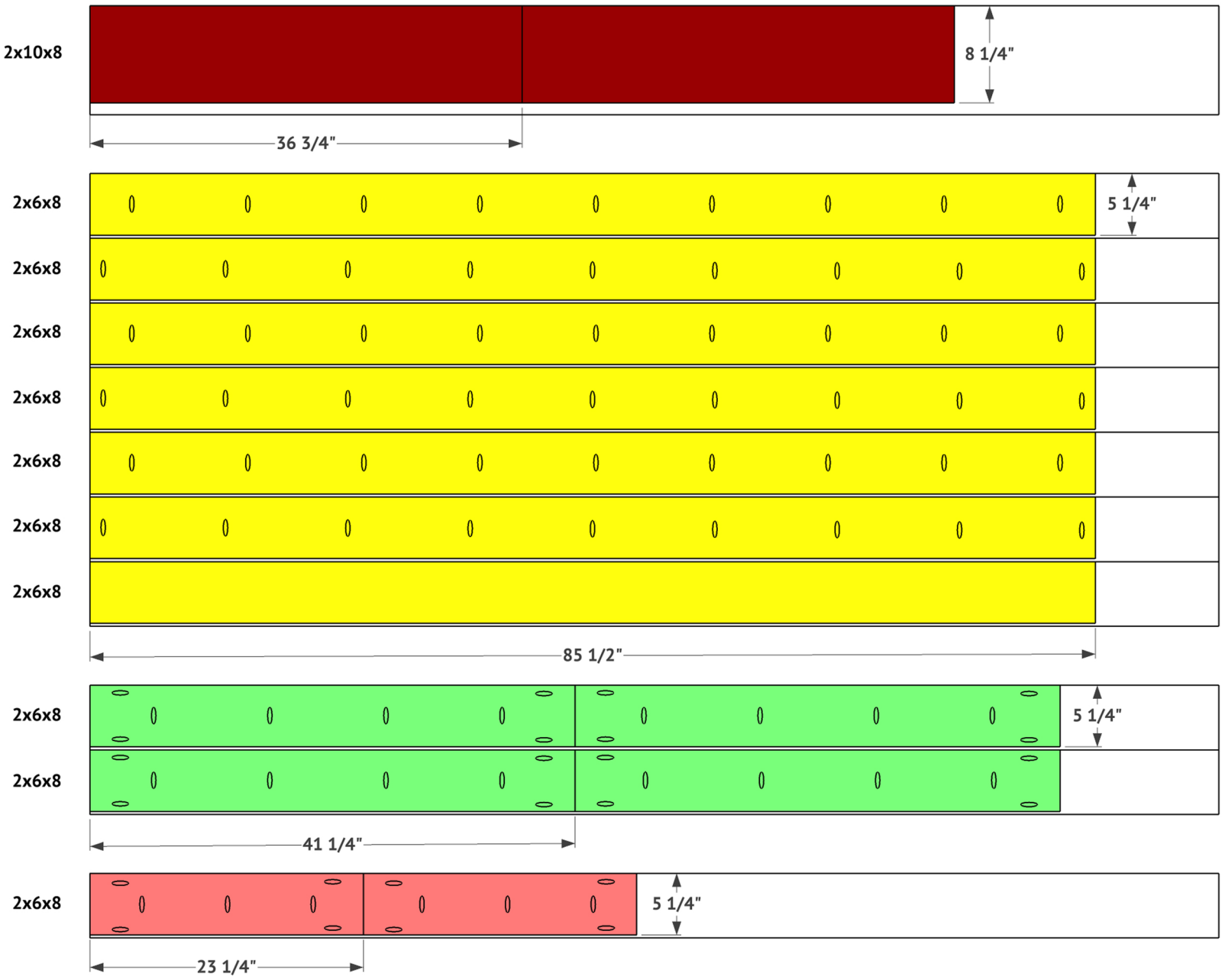

Remember! Many of these cuts are best made as you go. If you have questions, check out the tutorial on our site!

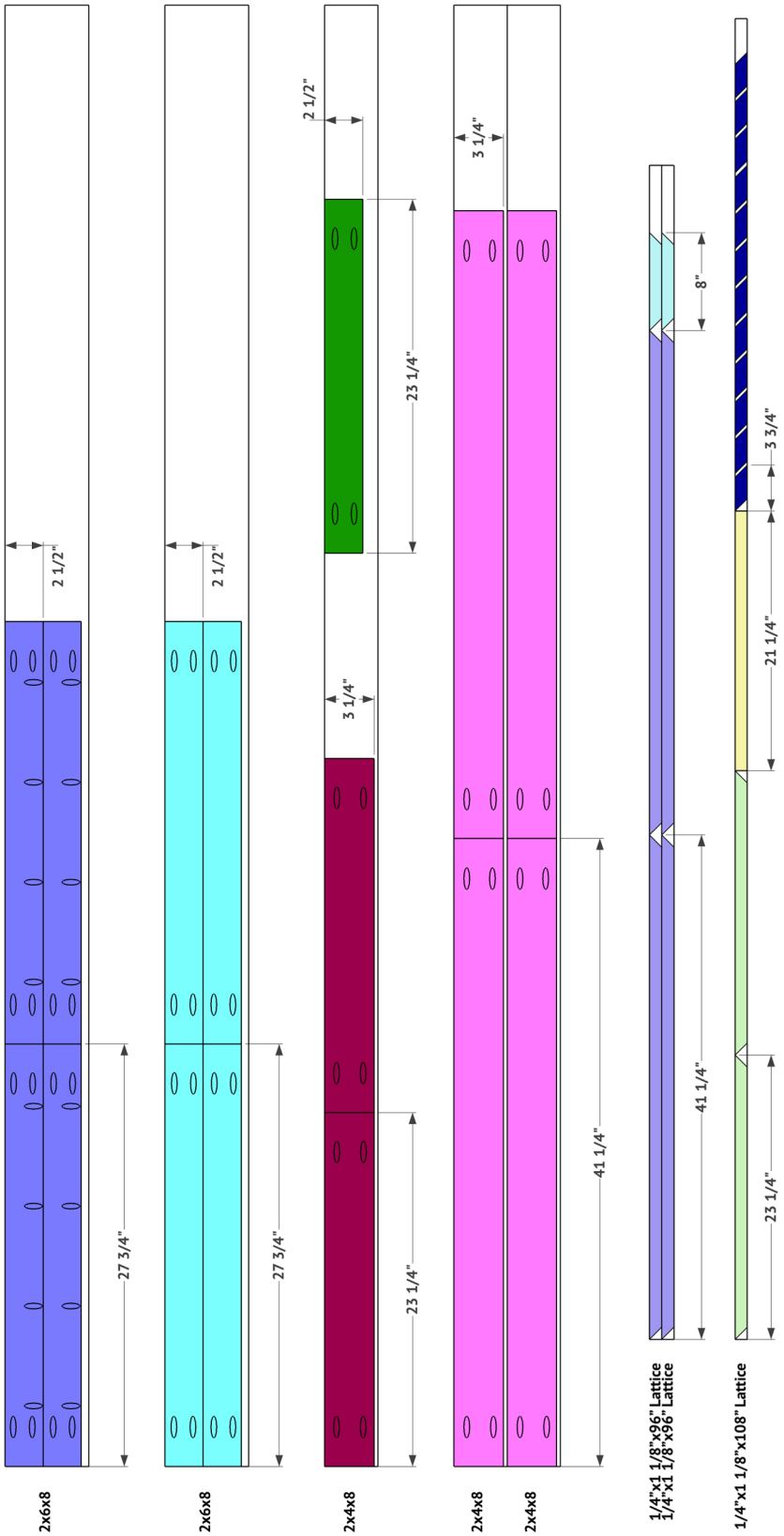

Remember! Many of these cuts are best made as you go. If you have questions, check out the tutorial on our site!

CUT LIST

48"x96"x1/2" Hardwood Plywood

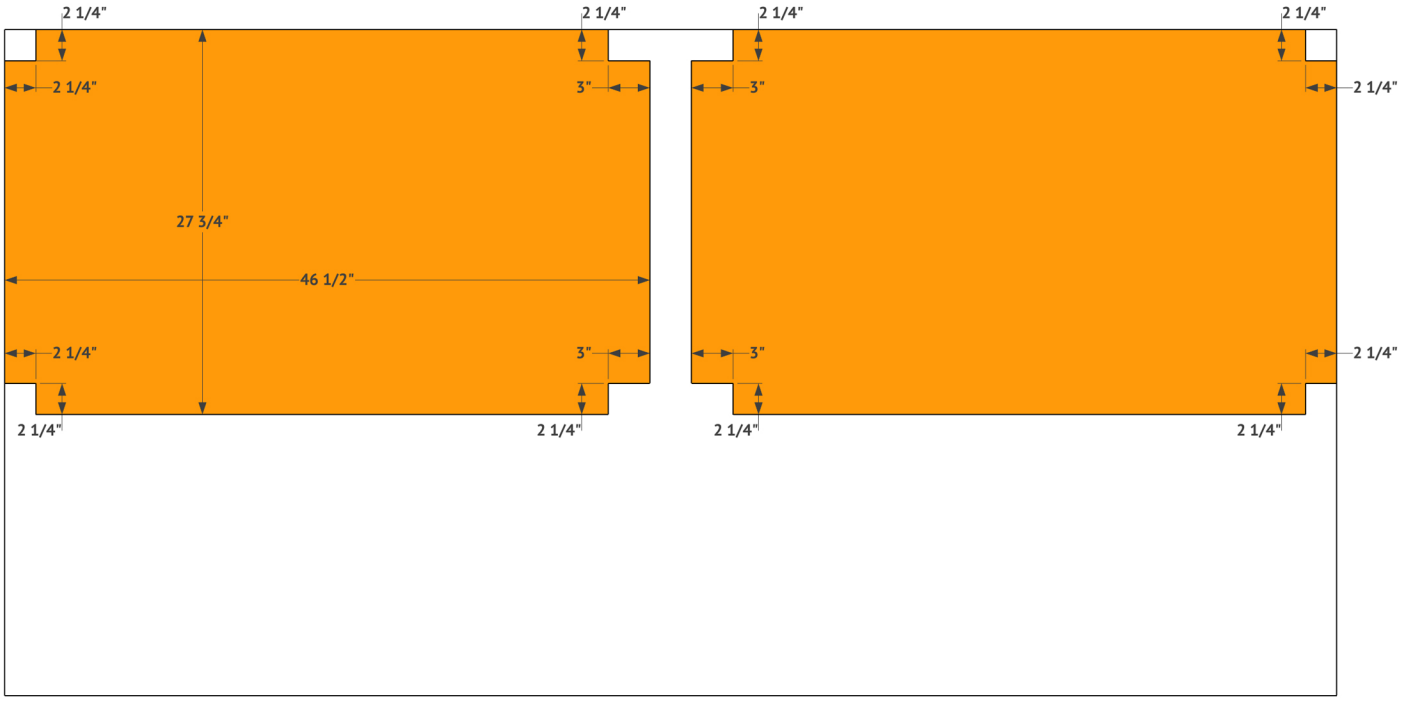

6" Turned Legs

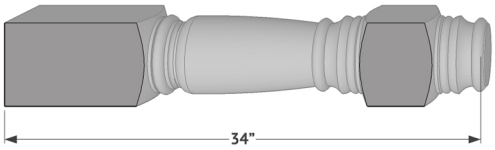

x6

Note: I used my table saw to rip the round edges off of all of the 2x boards. Refer to the cut list for the exact width of each board.

1

Cut all of the table top planks to size and drill 1 1/2" pocket holes on both ends of every boards and on one side of 6 of the boards. Attach them together with 2 1/2" pocket hole screws.

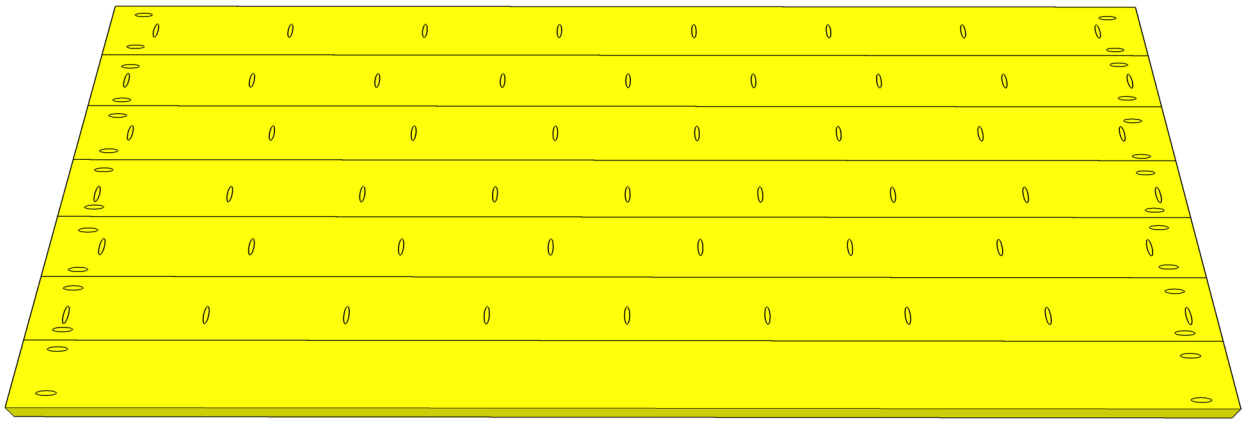

2

Cut the breadboards to size and attach them to the ends of the planks, through the pocket holes in the planks and into the breadboards. Use 2 1/2" pocket hole screws.

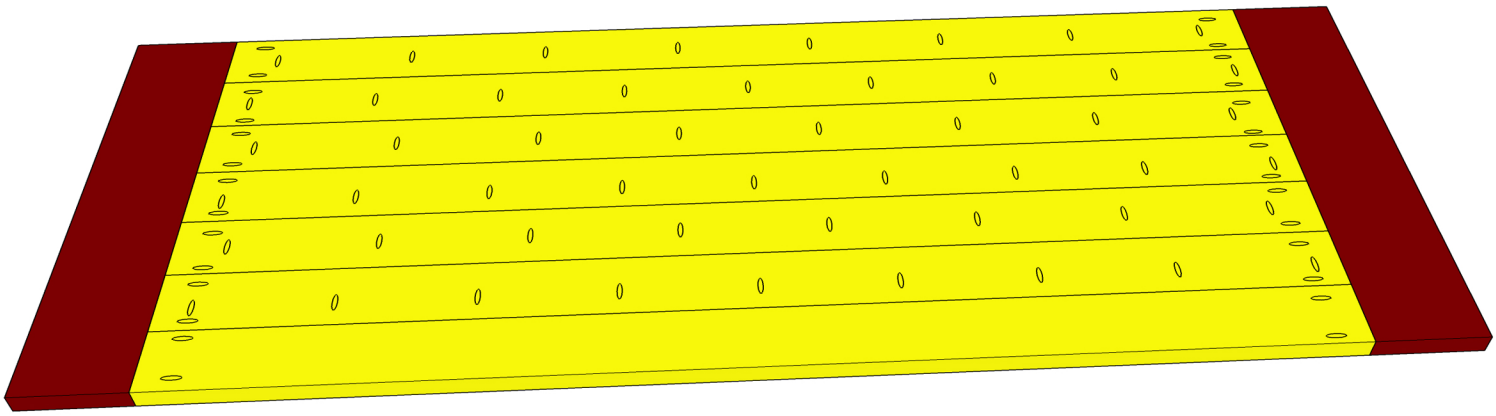

3

Cut the bottom, side apron pieces to size and drill 1 1/2” pocket holes in the ends of each piece. Center them on the bottom block of the end legs and attach them to on leg base assembly, and then the other, with 2 1/2” pocket hole screws and wood glue.

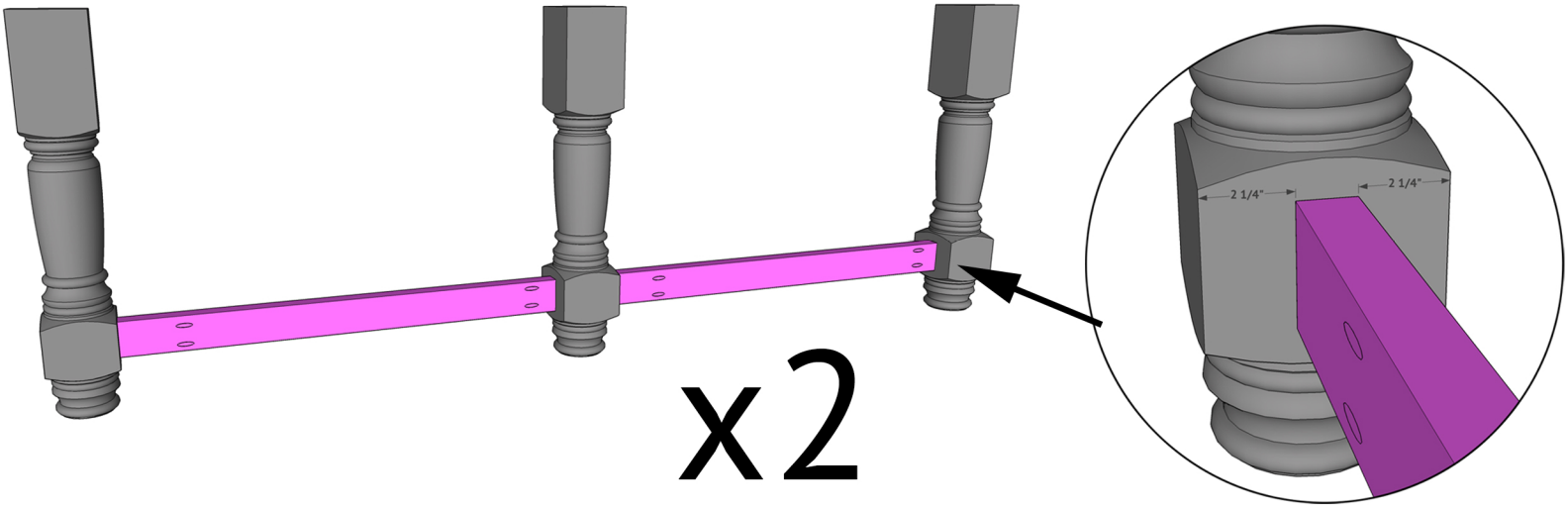

x2

4

Cut the bottom side apron pieces to size and drill 1 1/2” pocket holes in the ends of each piece. Center them on the bottom block of the end legs and attach them to one leg base assembly and then the other with 2 1/2” pocket hole screws and wood glue. Do this for both ends.

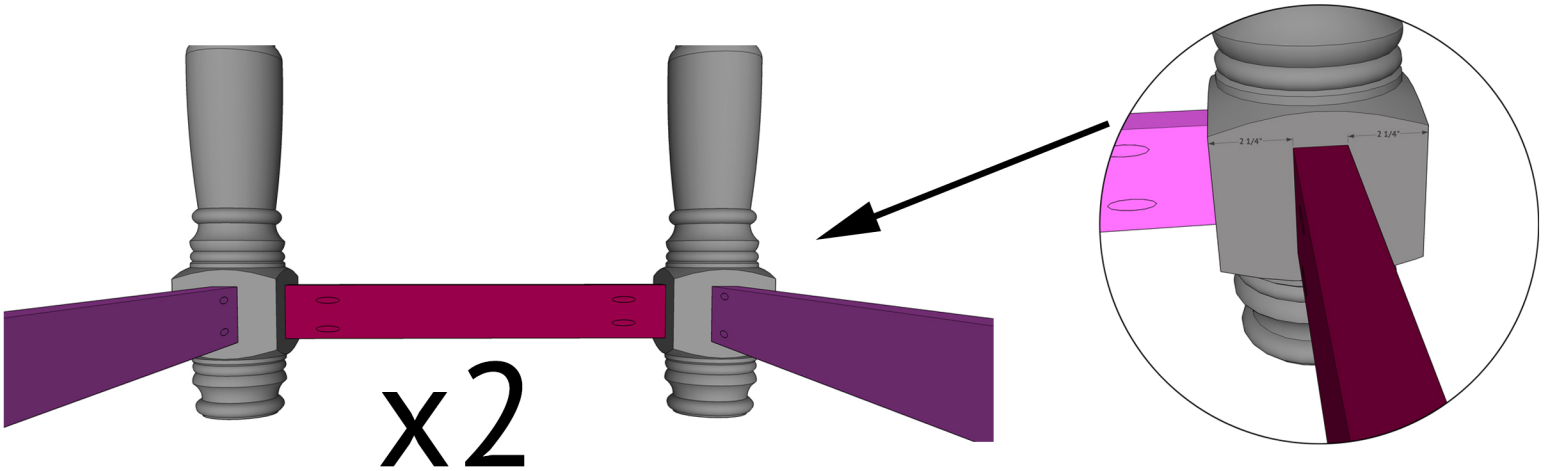

x2

5

Cut the bottom support pieces to size and drill 1 1/2” pocket holes on both ends of each piece. Space them out evenly and attach them to the side aprons with 2 1/2” pocket hole screws and wood glue, 1/2” from the top of the apron pieces.

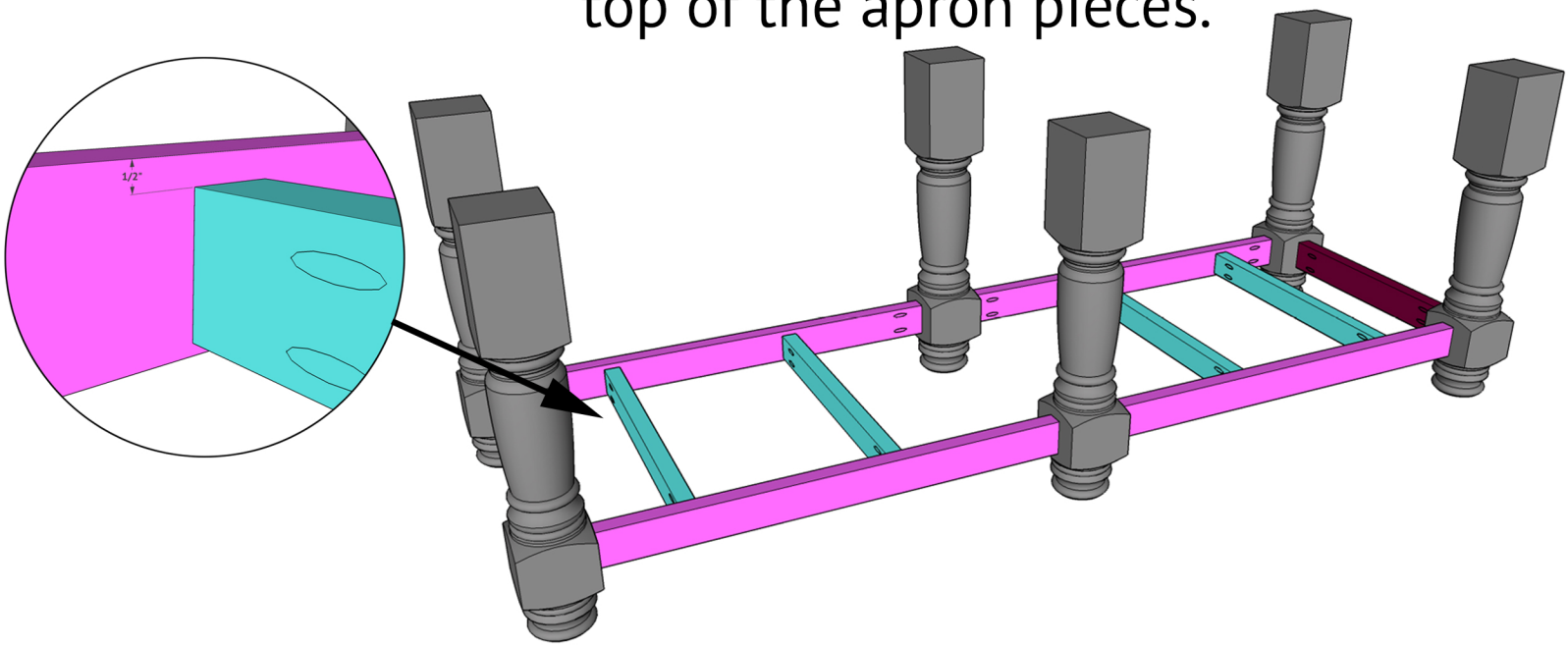

6

Cut the bottom, center support to size and drill 1 1/2” pocket holes at each end. Center it on the bottom blocks of the center legs and attach it with 2 1/2” pocket hole screws and wood glue. Make sure it is level with the other support pieces.

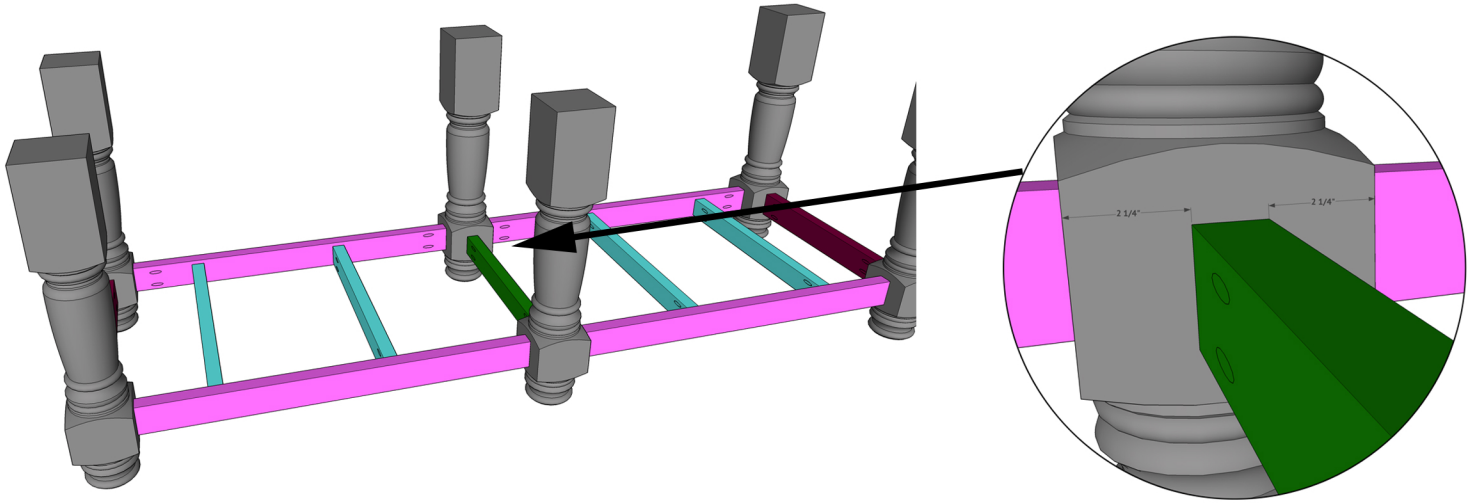

7

Cut the shelf pieces to fit your island. Lay one side inside the aprons to make sure it fits. Once it is a good fit, attach with 1 1/4” brad nails and wood glue from the top of the shelf and into the supports.

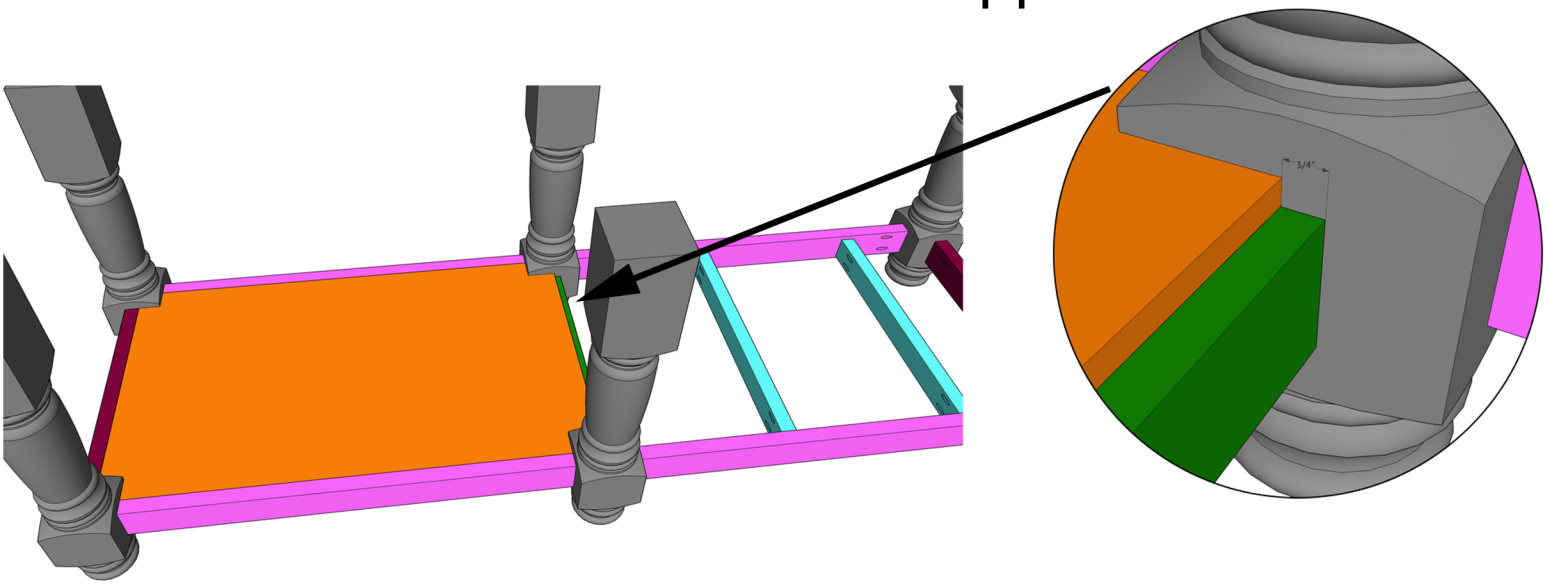

8

Cut the second shelf to size, dry fit and attach it the same way as the first shelf.

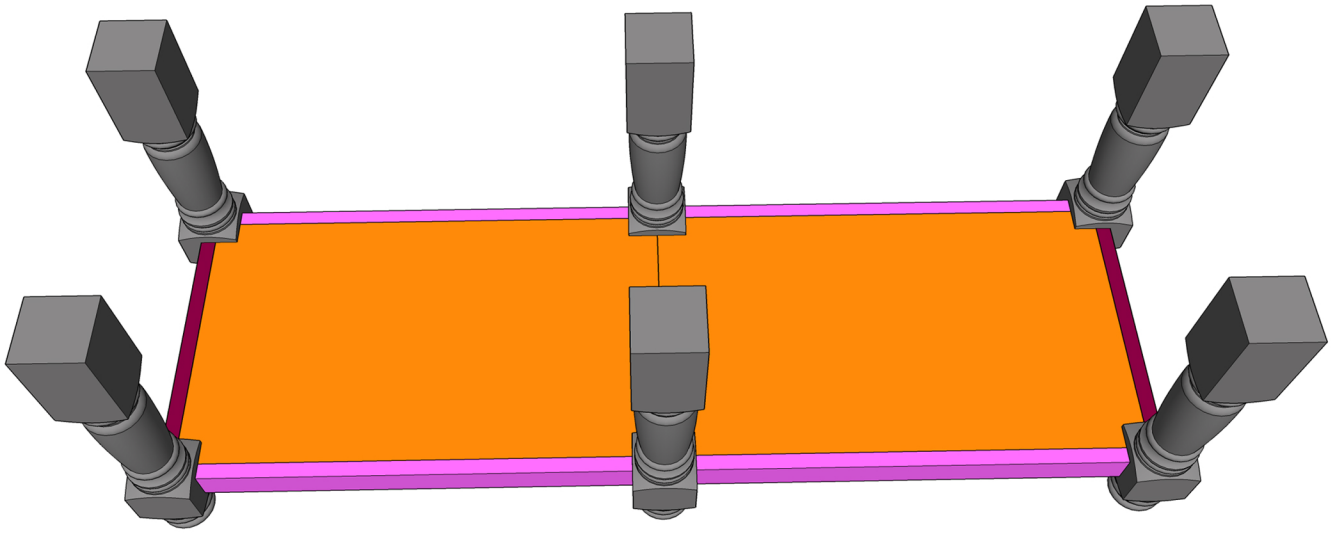

9

Cut the lattice pieces to fit around the edges of the shelf. Measure and cut as you go (all miter cuts will be 45°). The lattice will center over the seam between the aprons and the shelf, covering up any gaps to give it a nice clean look. Attach the lattice with 5/8” pin nails and wood glue.

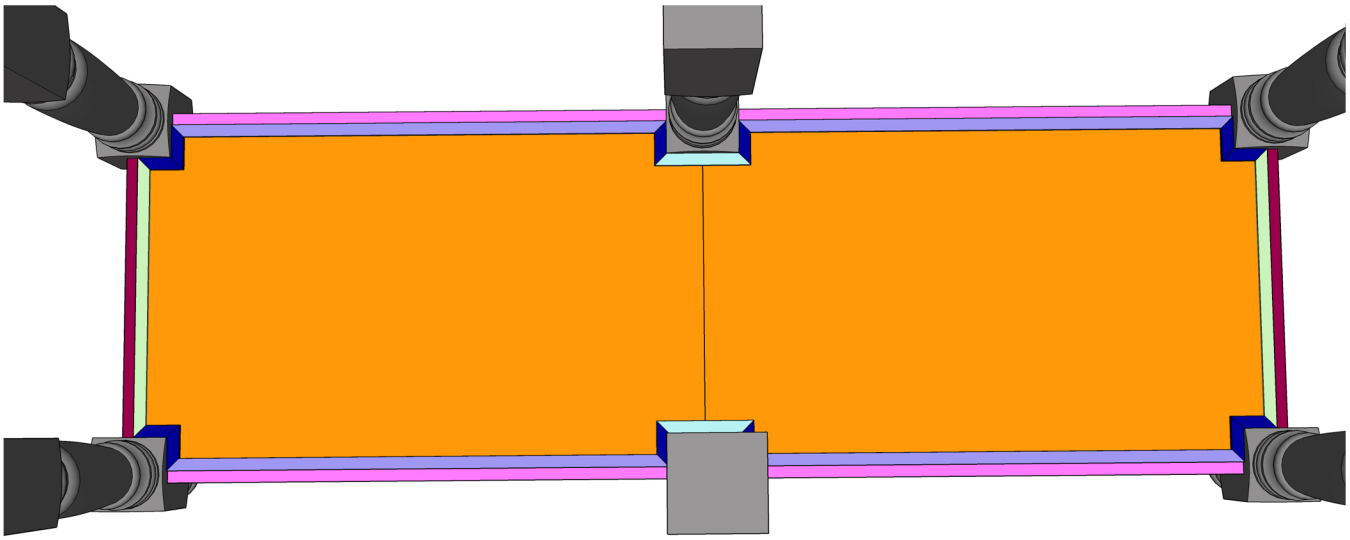

10

Measure and cut the center piece of lattice to fit, centerit over the seam between the shelves and attach it with 5/8” pin nails and wood glue.

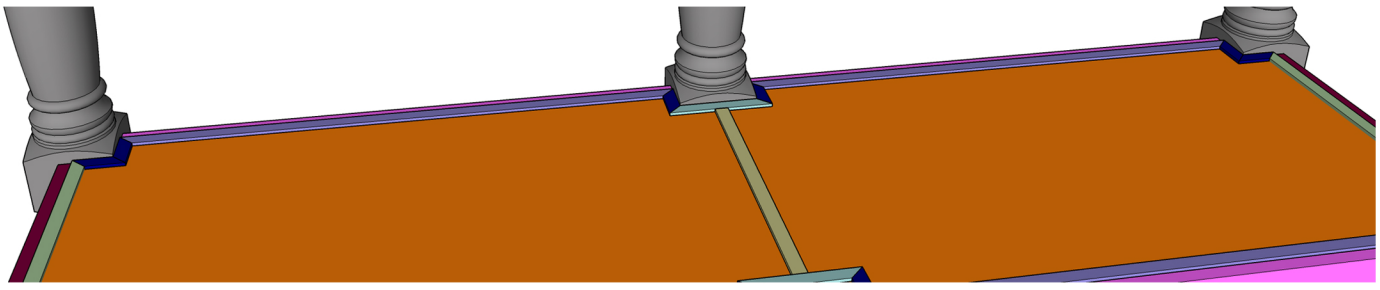

11

Cut the top, front and back apron pieces to size and drill 1 1/2” pocket holes on both ends of each piece. Center them up on the top block of the legs and attach with 2 1/2” pocket hole screws and wood glue. The top of the aprons should be flush with the top of the legs.

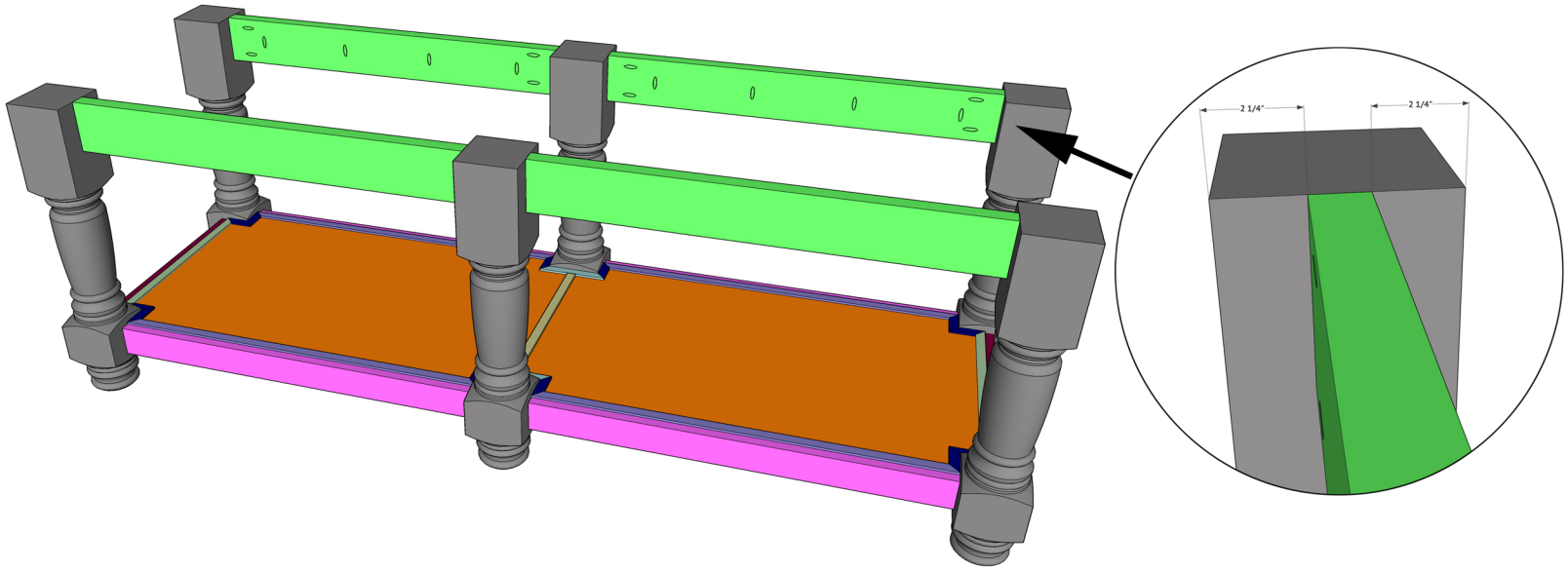

12

Cut the top, side apron pieces to size and drill 1 1/2” pocket holes on both ends of each piece. Center them up on the top block of the legs the same way as the previous step.

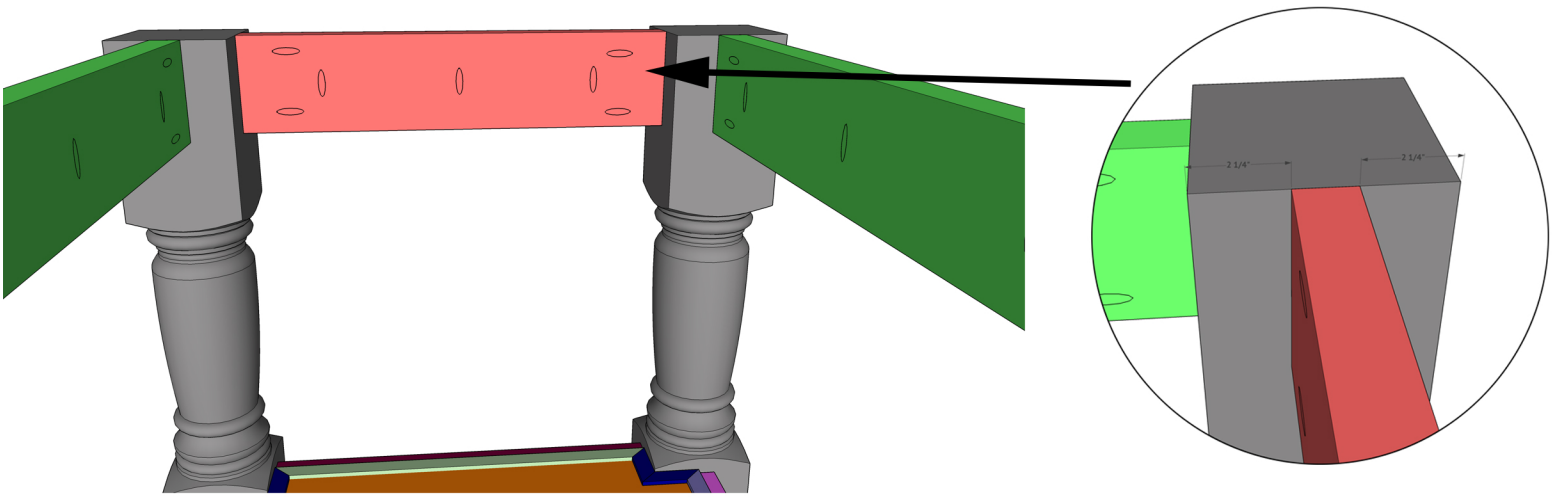

13

Cut the top support pieces to size and drill 1 1/2” pocket holes at both ends and one edge of each piece. Spread them out evenly and attach them to the top, front and back aprons with 2 1/2” pocket hole screws and wood glue. The top of the supports should be flush with the top of the aprons.

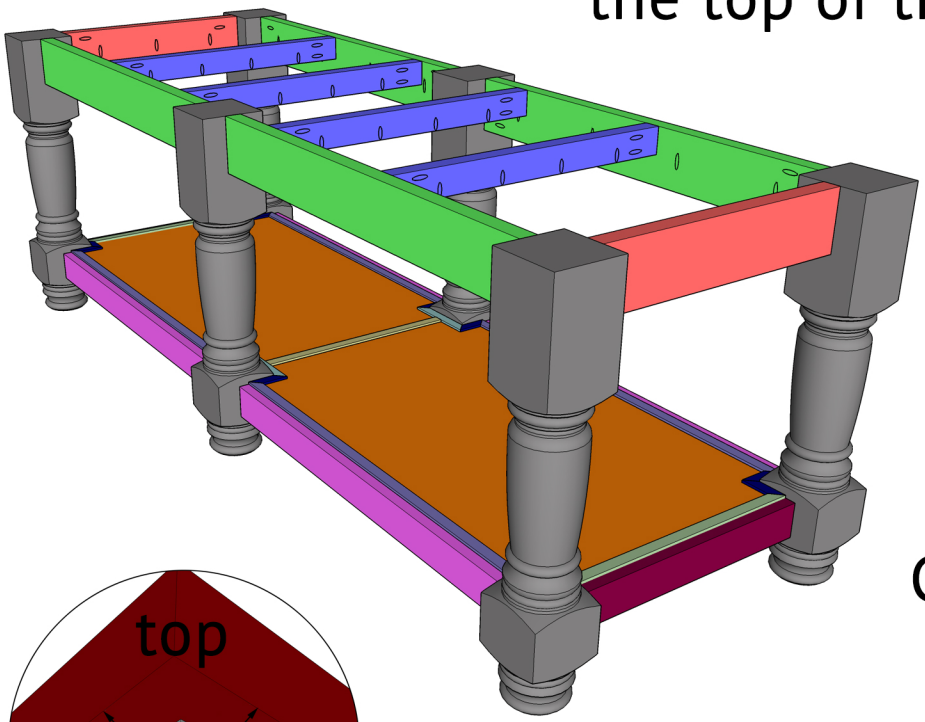

14

Center the planked top over the island base. Attach the top to the base with 2 1/2” pocket hole screws from the supports and aprons, into the bottom of the planked top. The top should overhang each leg by 3/4”.

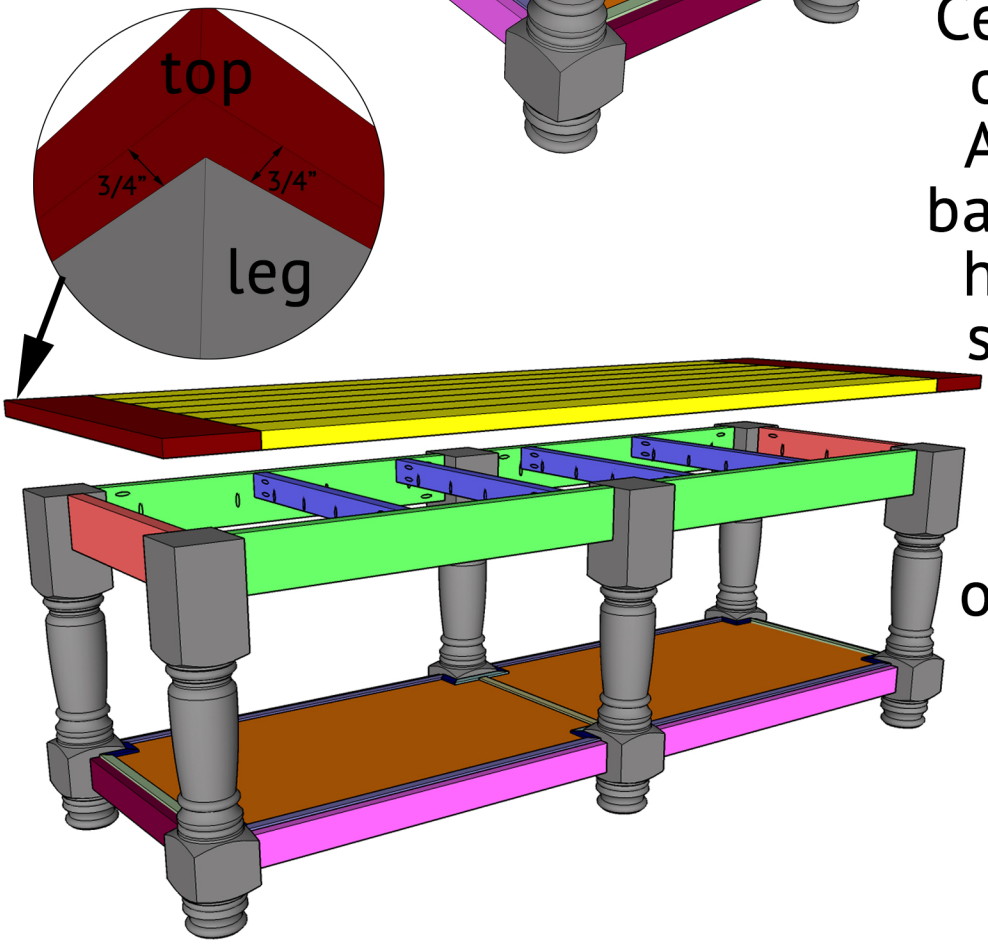

Fill all visible nail holes and give the island a good sanding. Then just add your finish! Make sure to share your builds with us on social media and use #shanty2chic so we can share them too!
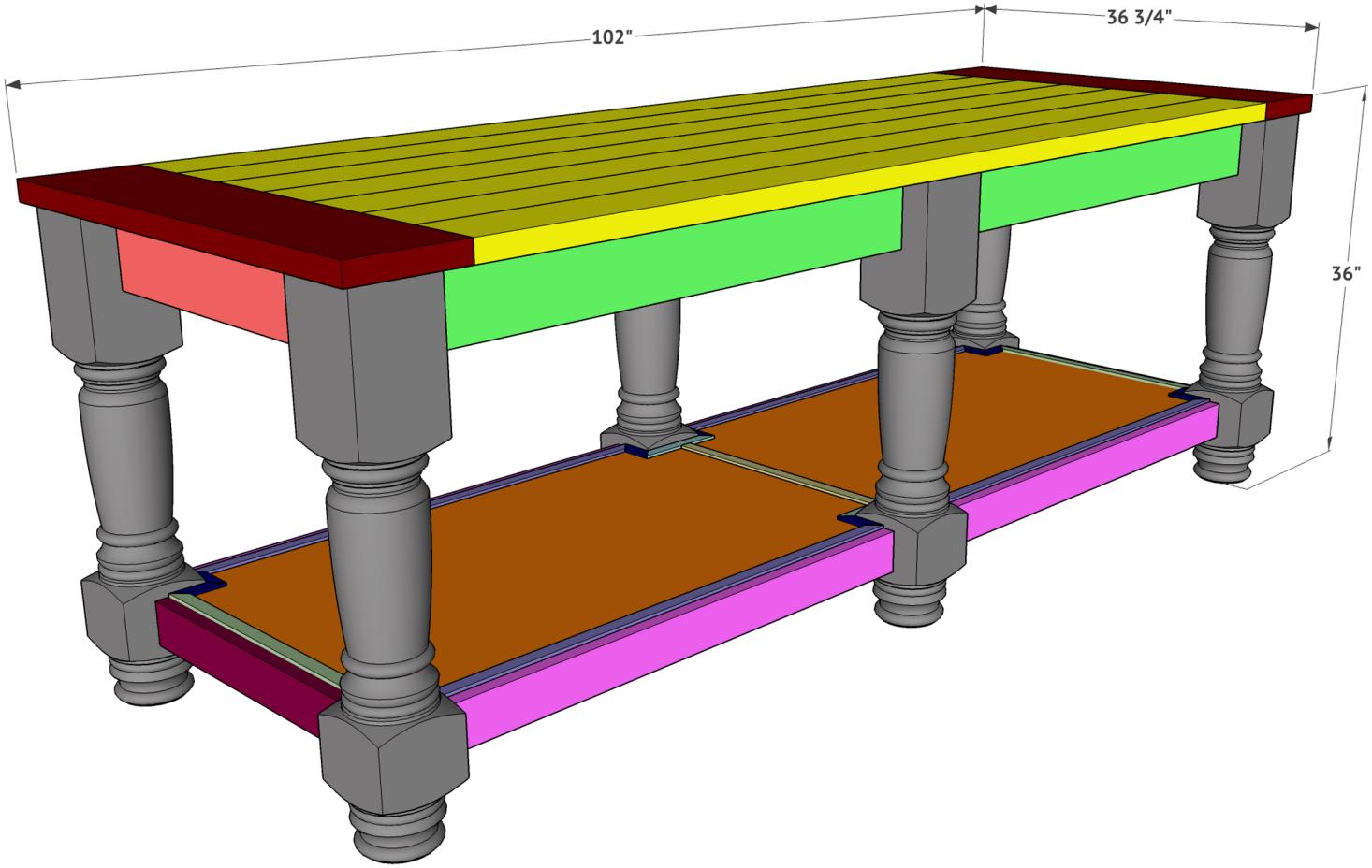
Happy Building!